MULTICOUPLINGS

Stucchi®

A CONSTANT FLOW OF SOLUTIONS

The manual multicouplings are tools that allow the connection and disconnection of several hydraulic, electrical and pneumatic lines simultaneously. The connection and disconnection operation requires a simple and quick movement allowing the operator to save time and operate safely. The multicouplings are equipped with flat face couplings that are designed to reduce contamination entering into a circuit, eliminate spillage, and reduce air inclusion during connection and disconnection of the couplings. Stucchi offers a wide range of multicouplings studies to satisfy the diverse applications requirements.

- General instructions for selection and use of the products — Page 2

MULTICOUPLINGS
- "GR" Series — Page 5
- "DP" Series — Page 36

COUPLINGS FOR MULTICOUPLING PLATES
- "FAP-Z" Series — Page 48
- "FAP-P" Series — Page 55

ACCESSORIES
- Electrical connectors — Page 60
- Plugs for multicouplings holes — Page 61

TECHNICAL INFORMATION
- Technical features and terms glossary — Page 62
- Seals and relative temperature range — Page 63
- Conversion factors — Page 63

The texts, data and illustrations indicated in this catalogue, may be changed by Stucchi S.p.A at any time without notice.
(CAT. MULTICOUPLINGS - March 2008).

GENERAL INSTRUCTIONS FOR SELECTION AND USE OF THE PRODUCTS

The incorrect use of products can cause malfunctioning and safety risks.
Therefore, before using Stucchi products, we strongly recommend reading and following the "general instructions for selection and use of the products" and the "instructions of use" of the specified product intending to use.

ATTENTION!!!
A defect, a wrong choice or an improper use of products, can cause damage to persons, animals and objects.
It is MOST IMPORTANT to read and closely follow the instructions written below before selecting or using Stucchi products.

1.0 GENERAL INSTRUCTIONS

1.1 Context
These safety instructions form a supplement and shall be used as one document together with the technical documentation related to the specified product to be installed.
1.2 Safeguarding
It is recommended that all systems and equipment be protected so that safety of people, animals and objects will be guaranteed in case of defect of the product.
1.3 Distribution of the instruction
A copy of these instructions has to be supplied to every person responsible for the selection and/or usage of the products.
1.4 Responsibility of the user
Due to the most various range of operating use and conditions of the products, Stucchi does not guarantee that every product can be used for every application.
These safety instructions don't analyse all technical parameters that have to be considered by selecting the products.
The end user, through their own analyses and tests, is responsible for the following:
- Final selection of the product
- Ascertainment that the requirements of the end user are satisfied and that the predicted use does not present a safety risk.
- Supply of all warnings regarding the safety of the equipment on which Stucchi products will be used.

2.0 INSTRUCTIONS FOR SELECTION OF THE PRODUCT.

2.1 Application fields
Check that the product is suitable for the specific application.
In case of doubt, contact the Stucchi customer service.
2.2 Type of product
Select the type of product most suitable for the working environment.
Flat face couplings: suitable for working environments where it is necessary to reduce to minimum the fluid loss during disconnection and to avoid dirt inclusion during connection.
Screw couplings: they are suitable for high working pressure and frequent impulses; they are connectable with high residual pressure.
Poppet valve couplings: widely used in the agricultural field.
2.3 Materials and treatments
Make sure that the materials and treatments of the product conform to the exposed working environment.
2.4 Dimensions
Choose the product with dimensions and flow suited to the circuit in order to avoid over stress damaging the product.
2.5 Flow inversion
For application with flow inversion during operation, use only products designed for that scope.
Flow inversion during operation generates turbulences inside the product that can cause damage on the components.
2.6 Thread
Choose the product with thread suitable for the application.
For high pressure conditions, over 50 MPa, products with taper thread NPT are recommended.
2.7 Type of medium
Verify that the seals of the product are compatible with the medium used.
Make sure that other not compatible fluids do not come in contact with the seals in case of maintenance.
Do not use the products with inflammable, explosive or dangerous fluids without approval of Stucchi S.p.A.
2.8 Medium temperature
Verify that the working temperature is within the functional limits of the coupling and its seals.
The couplings must not be connected and disconnected with a temperature higher than 80 degrees Celsius.
In case of connection-disconnection with temperature higher than 30 Celsius degrees, the operator must be protected using gloves and/or other devices to prevent any leakage or splashing causing injury to himself, persons, animals and objects.
2.9 Environment temperature
With extreme temperature conditions, the mechanical resistance of the products changes. The use and handling of couplings in case of ice can be difficult due to ice inclusion in the blocking mechanisms.
Use protective gloves in applications with hot and cold operating temperature.
2.10 Pressure
Verify always if the maximum working pressure of the product is the same or higher than the pressure peaks of the application.
Do not make confusion between the burst pressure and the maximum working pressure, so do not use the value of the burst pressure for your selection.

Check that the number of impulse cycles which the product has been tested is compatible with the impulse number of the application.
2.11 Residual pressure
For connection and disconnection with residual pressure use only couplings that are developed for this scope.
The term 'internal residual pressure' means: the static pressure retained in the system, which has not be generated by a working pump or other accessories in movement.
The structure of the machine or plant in which these products are placed, must be suitable to limit accidental splashing and fluid losses caused by wrong usage or malfunctioning of the product, in order to avoid direct and indirect damage on persons, animals or objects. The temperature of the fluid must not exceed the limits mentioned in point 2.8
2.12 Connection frequency
It is important to know the connection frequency with which the coupling is used, while this has significant influence on the life of both springs and seals.
An under-estimated value can cause unexpected fluid loss.
2.13 Safety device
If used in environments or machines in strict closeness at persons, animals or objects (1 meter), within easy accidental disconnection conditions, it is highly recommended to use ball locked couplings with security system or screw couplings and to make sure that the preventive disconnection mechanism is correctly screwed together.
2.14 Mechanical loads
Side loads, mechanical stresses in general and vibrations reduce significantly the life of the product and are often the cause of sudden damages.
It is recommended to assemble quick release couplings without risks of mechanical damage and over-loading caused by stress generated in flexible or rigid hoses and to assemble quick release couplings on hoses with proper dimensions referred to the nominal passage of the quick release coupling.
2.15 Rotation
In case of applications with rotation use only products developed for this scope.
In case of rotation between male and female part it is necessary to inform in advance Stucchi customer service or to provide the connection with swivel joints suitable for this scope.
2.16 Special applications
You should be advised to take particular attention to special applications (such as vacuum use, high temperature, etc...).
Please consult Stucchi customer service who is able to give instructions concerning the use of Stucchi products.

3.0 INSTRUCTIONS FOR STOCK PRESERVATION

For a correct preservation of the product and in order to avoid damage before even starting to use the product read carefully the following instructions.
3.1 Packaging
The products have to be kept in closed packaging to protect the components, mainly the seals, from dust and ultraviolet radius.
3.2 Environments
The products shall be kept in environments with low percentage of humidity, no condensation, no salt, protected from atmospheric factors, far away from heating devices and magnetic fields.
Eliminate equipment that can produce ozone, as this element is extremely destructive for the seals.
3.3 Protection cap
The protection cap assembled on the thread has to be removed at the moment of the product installation only.
3.4 Special packaging
In case of requests for special packaging contact the customer service.

4.0 INSTALLATION INSTRUCTIONS

4.1 Pre Installation inspections
Before installation of the product it is necessary to inspect it visually and to verify if the part number and description of the product refers to the one requested.
4.2 Use of flexible hoses
To absorb better the vibrations and mechanical stress on the connection mechanism of the couplings, it is suggested to use flexible hoses.
In this way you avoid vibrations of the circuit that cause accidental disconnection or damage on the coupling.
4.3 Hose assembling
The hose has to be assembled so that connection/disconnection of the couplings takes place in easy way and aligned position.
Presence of high radial/axial forces creates misalignment of the couplings during connection/disconnection and can cause damage on the connection and sealing parts.
4.4 Adapter assembling
Use adapters and sealing systems conform to the thread of the product only.
To install and remove the couplings use proper tools and act only on flat spanner surfaces of the coupling. Do not use improper tools (spanner for hoses, bench vice, pincer etc.) while these can cause damage on the coupling with malfunction as result.
Use the tightening torque stabilized by the norm to screw the adapters.
4.5 Positioning of the coupling
It is suggested to install the couplings in such way that they can easy be connected and disconnected, reducing to the minimum the forces and risks for the operator.
It is suggested to protect the couplings using shelters and protections (see sector norms) to guarantee the security and to prevent damage.

5.0 INSTRUCTIONS OF USE

5.1 Modality of use
The modality of use changes in accordance to the type of product used.
For every type of product, the modality of use described in the catalogue or the specific usage instructions supplied by Stucchi have to be carefully followed .The system has to be immediately stopped and the product should be replaced whenever one of the following conditions will occur:
- Visible damage, damaged parts of the product, cracks and corrosion.
- Difficulties in connection and disconnection generated by too high force compared to the data mentioned in the catalogue.
- Presence of leakage.
- Malfunctioning of the valve.
- Block of the circuit.

In the above mentioned cases please contact Stucchi customer service for information.
5.2 Connection / Disconnection
Before connecting, the parts of the couplings involved in the connection have to be cleaned. Connection with dirty parts may cause damage such as unexpected and dangerous leakage on the coupling.
Another consequence of dirt is contamination of the system.
Do connect and disconnect the coupling only as indicated in the modality of use: do not use other unsuitable tools.
5.3 Mechanical damage
The product shall not be exposed to mechanical damages while they can cause damage and malfunctioning.
Do not use tools to open the valves to release residual pressure trapped in the circuit.
5.4 Circuits cleaning
Use the products in clean circuits.
Dirt can damage components of the product and cause malfunctioning.
5.5 Protection caps
Use anti-dust caps when coupling is disconnected to avoid dirt and contamination and to protect the surface from accidental damage caused by collisions.
5.6 Use of semi-couplings of other manufacturers.
Do not connect Stucchi half-couplings with other not compatible half-couplings.
In case of connection of a Stucchi half-coupling with a half-coupling from another manufacturer, do not exceed the lowest nominal pressure of the two products.

6.0 MAINTENANCE INSTRUCTIONS

The good functional of product is often compromised by a lack of maintenance.
To avoid unexpected damage that can cause times of arrest and safe risks it is necessary to apply maintenance periodically.
The period dedicated to the maintenance of the product has to be defined by the user and depends on the type of application and on the working conditions the product is exposed to.

6.1 Ordinary - Preventive maintenance
First, the product should be well cleaned and the area where it is installed as well, then you should check and verify the following steps:
- Absence of breakage or various damage on the products.
- Absence of leakage in general.
- Correctness of tightening torque of the adapters.
- Check the level of circuit contamination.
- The connected parts or the parts in movement should be greased with grease compatible with the seals assembled in the products.
- The replacement of the coupling should be planned in accordance with the requested endurance for the specific application.

6.2 Repair
In case of reparation of the products it is recommended to follow Stucchi's specific instructions and use spare parts, tools and documentation supplied by Stucchi only.
Please contact Stucchi customer service for the above specific information.

IT IS THE RESPONSIBILITY OF THE USER TO SELECT, INSTALL AND USE THE QUICK RELEASE COUPLING IN THE CORRECT WAY.

For more information please contact the Stucchi customer service.

SERIES: **GR MULTICOUPLINGS**

INTERCHANGE: Stucchi internal specification

MAIN APPLICATIONS

- Vehicles
- Mobile construction equipment
- Agricultural equipment
- Drilling rigs
- Industrial equipment

"GR" is the manual multicouplings series that offer a wide range of solutions for any application requiring connection and disconnection of several hydraulic, electrical and pneumatic lines. Up to ten lines can be simultaneously connected and disconnected by a safe, simple and quick movement requiring low effort. The lines can all have the same size or each line can be different from the others according to the application.

Stucchi®
A CONSTANT FLOW OF SOLUTIONS

TECHNICAL FEATURES AND OPTIONS

- Interchangeability: Stucchi internal specification
- Mechanical connection: Internal cams and locking pins
- Connection system: Rotating the lever
- Disconnection system: Rotating the lever
- Construction material and surface treatment: Body plates in brass nickel plated. Cams and pins in high resistance carbon steel with nitriding + oxidation (QPQ) treatment. Others components in carbon steel with zinc plating or zinc iron (black) treatment.

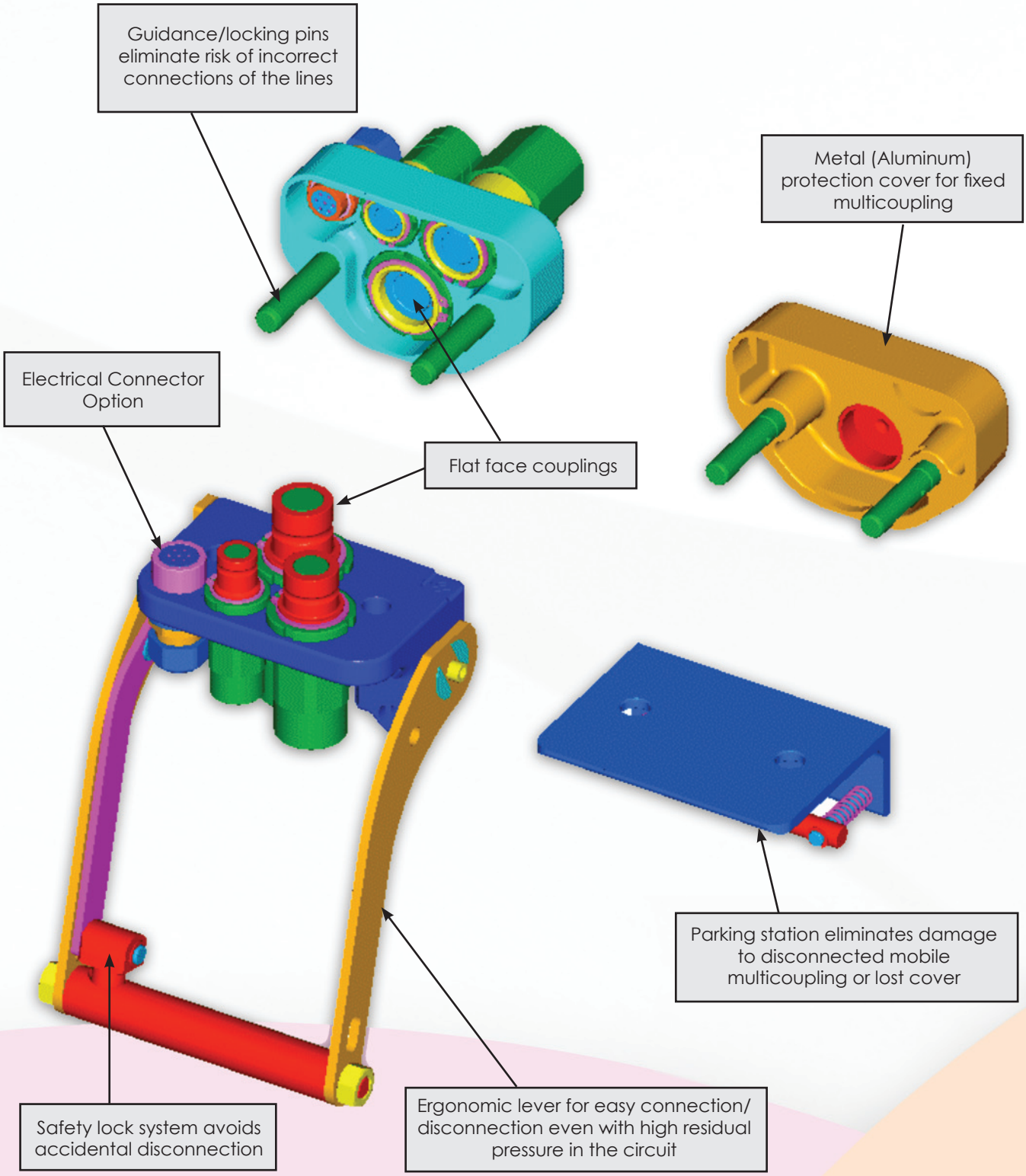

BENEFITS

- Quick connection and disconnection of up to ten hydraulic, electrical and pneumatic lines without any risk to incorrect connection of the lines.
- Flat face couplings: Easy to clean avoiding contamination of circuit. No fluid loss to the environment.
- Couplings mounted on the plates with threaded sleeves or seeger/snap rings for easy installation or replacement.
- Using FAP couplings with triple valve system, it is possible connect and disconnect with high residual pressure in the circuit.
- Singles female couplings can be connected manually to the male couplings on the fixed half. This can be very useful for the connection of auxiliary lines that are not fitted in the mobile half.
- Possibility to fit electrical connector for electronic control system on the equipment.
- Mechanical connection by internal cams and locking pins eliminates brinelling effect on the couplings.
- Safety lock on handle allows a single hand operation.
- Compact design.
- Easy to install also on pre-existent system. Safe and simple to use.

HOW TO USE

INSTALLATION:

- Fix the fixed multicoupling on the machine using fixing screws as indicated in the drawing here below.
- After having assembled the couplings on the hoses, place them in the holes of the multicouplings and lock them using proper threaded sleeve and/or seeger/snap rings.

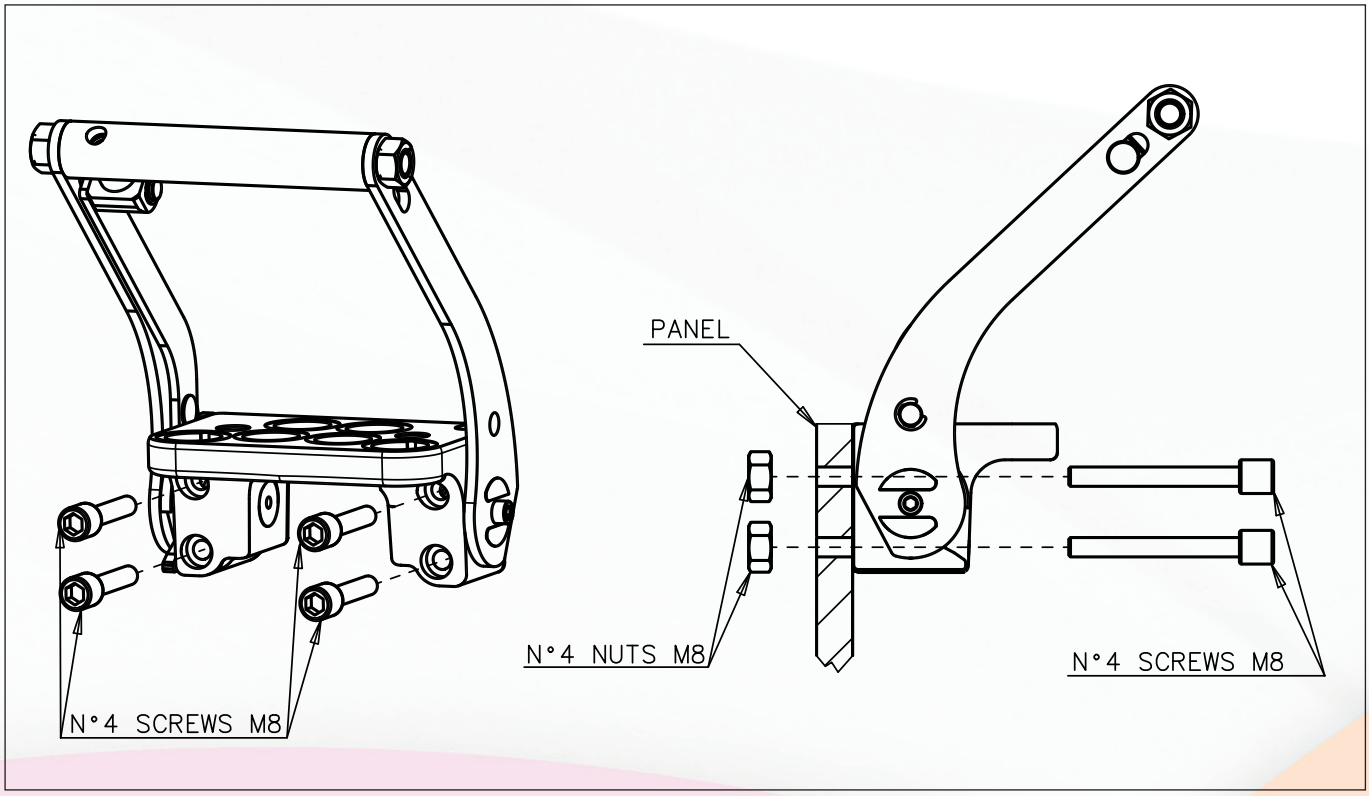

TO CONNECT:

- Before to couple clean the flat mating surface of the couplings to avoid the inclusion of dirty in the circuit.
- Insert the guidance pins of the mobile multicoupling in the holes of the fixed multicoupling and move the mobile half till the contact of the couplings faces (fig. 1).
- Push the red safety button , at the same time acting on the handle turn the lever in the direction of the fixed multicoupling (fig. 2).
- After a short rotation release the red button (fig. 3).
- Continue to rotate till the safety lock automatically engage itself (fig. 4).
- Now the multicoupling is coupled and ready to work.
- In case of connection with residual pressure in the circuit, the maximum force is required only for the last third of the connection.

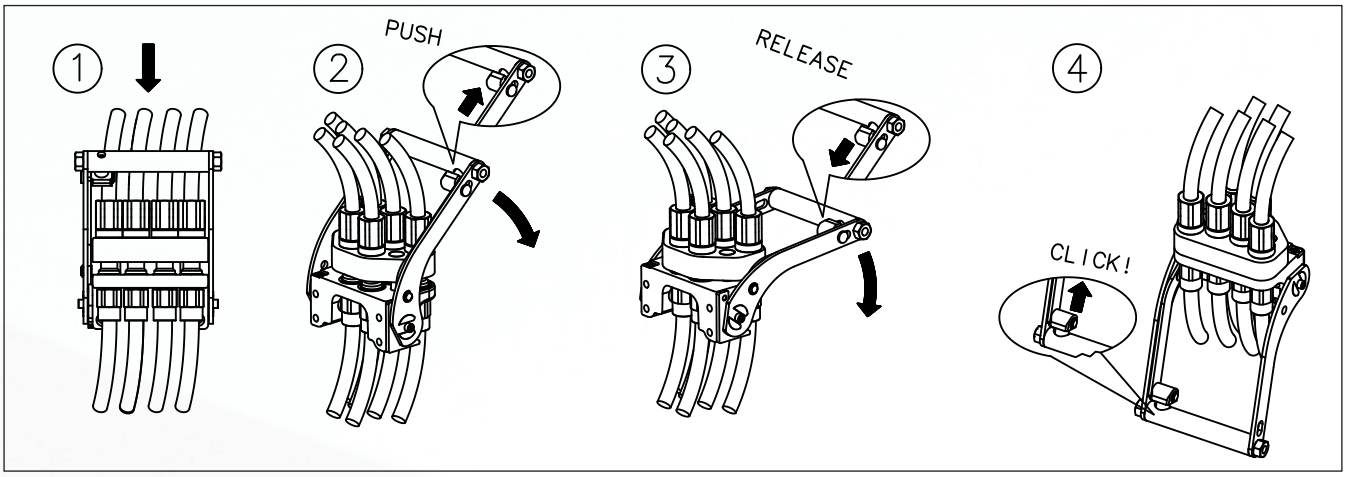

TO DISCONNECT:

- Push the red safety button, at the same time acting on the handle turn the lever in the direction of the mobile multicoupling (fig. 5).
- After a short rotation release the red button (fig. 6).
- Continue to rotate till the safety lock automatically engage itself (fig. 7)
- Now the multicoupling is uncoupled and it is possible to pull out the mobile half (fig. 8).
- When the fixed multicoupling is mounted upside down, the mobile multicoupling must be supported in order to avoid it fall down causing damage.
- In case of disconnection with residual pressure in the circuit, the maximum force is required only for the first third of the disconnection.

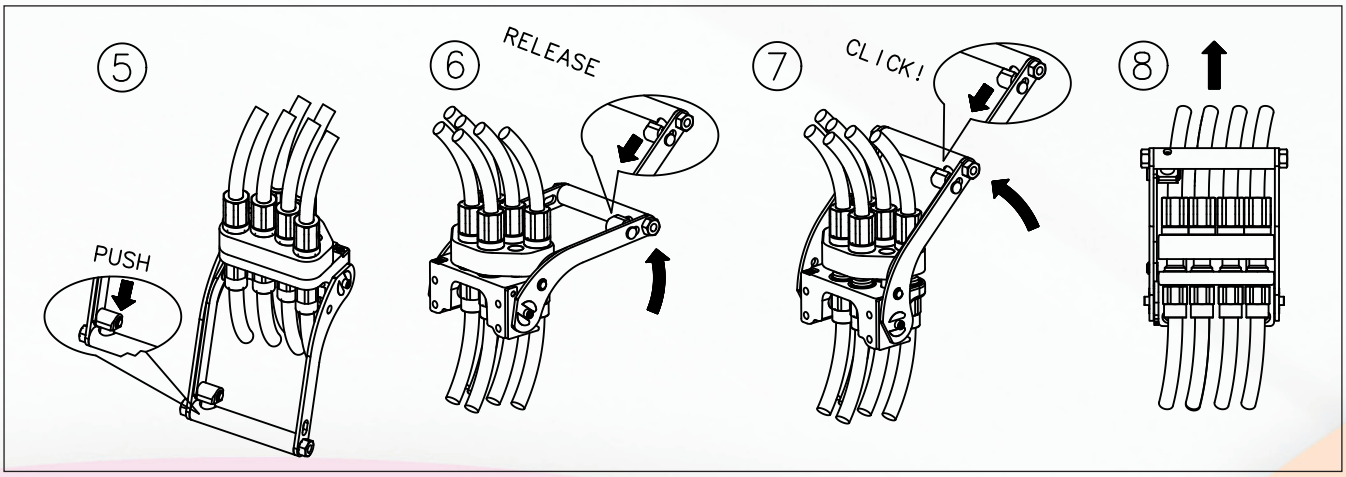

WARNING !

- Do not force the lever without pushing the red safety button.
- Do not use extensions or other tools to ease the rotating of the lever.
- Do not connect the fixed half with the mobile half if dirt or other material is between them.
- When the multicoupling is disconnected, it is suggested to use the protection cover for the fixed half and the parking station for the mobile half.

PERFORMANCE

All the Stucchi multicouplings have been tested at their maximum resistance by impulse pressure test.
The maximum resistance (N) for each multicoupling model, is indicated in the data sheets below.

The force applied to multicoupling coupled, depends on the number of couplings under pressure at the same time, on their operating pressure and on their size.
For a correct use of the multicoupling is necessary to verify that the force is not greater to the maximum resistance of the multicoupling.
F= [(P1/4x S1/4) + (P3/8x S3/8) + (P1/2x S1/2) + (P5/8x S5/8) + (P3/4x S3/4) + (P1x S1)] x 9.8
F = Force applied to multicoupling (N)
P = Total amount of operating pressure coupled in the couplings with same size (bar)
S = Hydrostatic pushing area coupled (cm2)
The operating pressure for a single coupling must not be greater to the maximum operating pressure coupled indicated in table.

Coupling size	Hydrostatic pushing area coupled	Maximum operating pressure coupled for FAP couplings
1/4	S1/4= 0,723 cm2	42 Mpa (420 bar)
3/8	S3/8= 1,226 cm2	35 Mpa (350 bar)
1/2	S1/2= 1,893 cm2	33 Mpa (330 bar)
5/8	S5/8= 2,404 cm2	33 Mpa (330 bar)
3/4	S3/4= 3,298 cm2	33 Mpa (330 bar)
1	S1 = 4,335 cm2	30 Mpa (300 bar)

EXAMPLE:

Max. resistance of GRM6 multicoupling is 23000 N.
To verify if GRM6 multicoupling resists to operating condition of following application:

One line size 3/8 with max. operating pressure coupled of 30 Mpa (300 bar)
One line size 3/8 with max. operating pressure coupled of 15 Mpa (150 bar)

One line size 5/8 with max. operating pressure coupled of 25 Mpa (250 bar)
One line size 5/8 with max. operating pressure coupled of 10 Mpa (100 bar)

One line size 3/4 with max. operating pressure coupled of 20 Mpa (200 bar)
One line size 3/4 with max. operating pressure coupled of 5 Mpa (50 bar)

It is necessary verify that F (force applied to multicoupling) is not greater than max. multicoupling resistance:

P3/8 = 300 bar + 150 bar = 450 bar
P5/8 = 250 bar + 100 bar = 350 bar
P3/4 = 200 bar + 50 bar = 250 bar
F= [(P3/8x S3/8) + (P5/8x S5/8) + (P3/4x S3/4)] x 9.8 =
F= [(450x1,226) + (350x2,404) + (250x3,298)] x 9.8 =
F= [551.7 + 841.4 + 824.5] x 9.8 = 21732 N

Being F (21732 N) lower than max. multicoupling resistance (23000 N),
the GRM6 multicoupling is suitable for this application.

GR3-9 MULTICOUPLING

- Three lines size 3/8
- One line predisposed for electrical connector Female EC.., Male EC..
- On request other line predisposed for electrical connector

GR3-9

MAX. MULTICOUPLING RESISTANCE
MAX. RESISTENZA MULTINNESTO 8000 N

FIXED AND MOBILE MULTICOUPLING
Multinnesto Fisso e Mobile

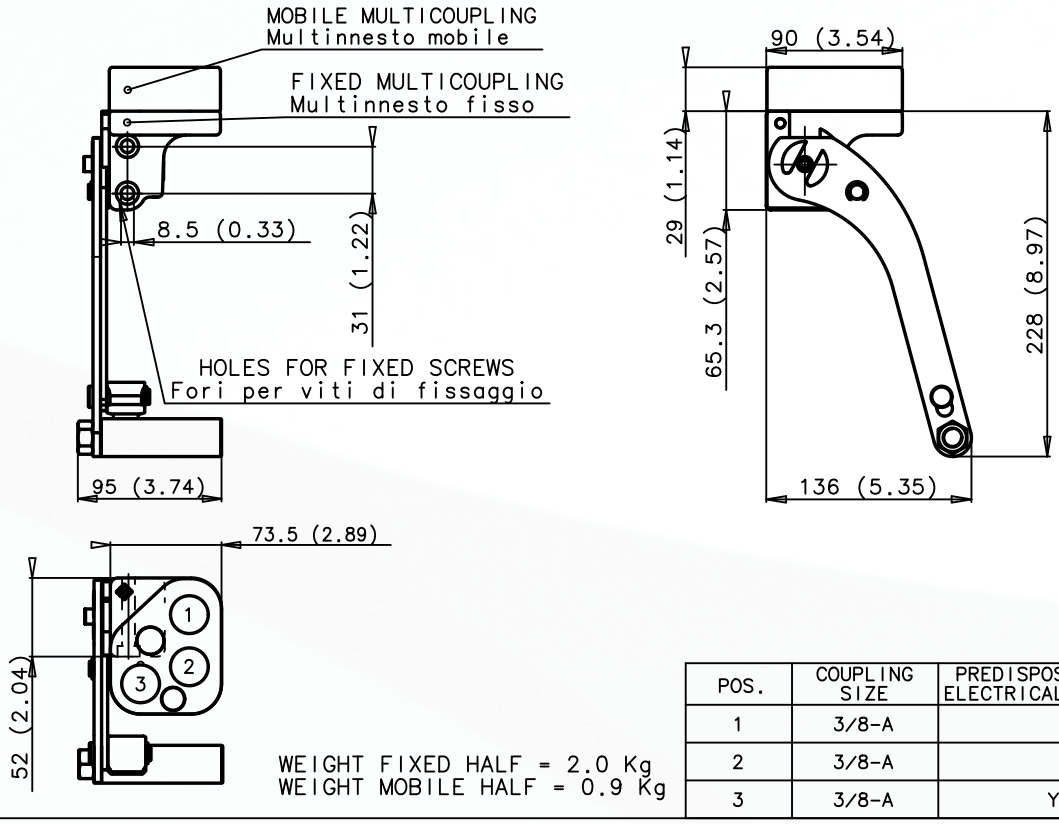

POS.	COUPLING SIZE	PREDISPOSITION FOR ELECTRICAL CONNECTOR
1	3/8-A	-
2	3/8-A	-
3	3/8-A	YES

WEIGHT FIXED HALF = 2.0 Kg
WEIGHT MOBILE HALF = 0.9 Kg

CAP FOR MULTICOUPLING GR3-9
Tappo multinnesto fisso GR3-9

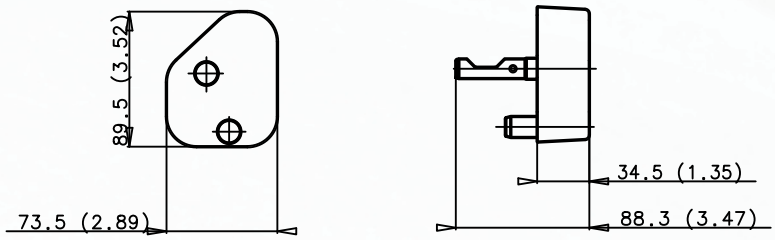

WEIGHT = 0.4 Kg

PARKING STATION GR3-9
Stazione di parcheggio GR3-9

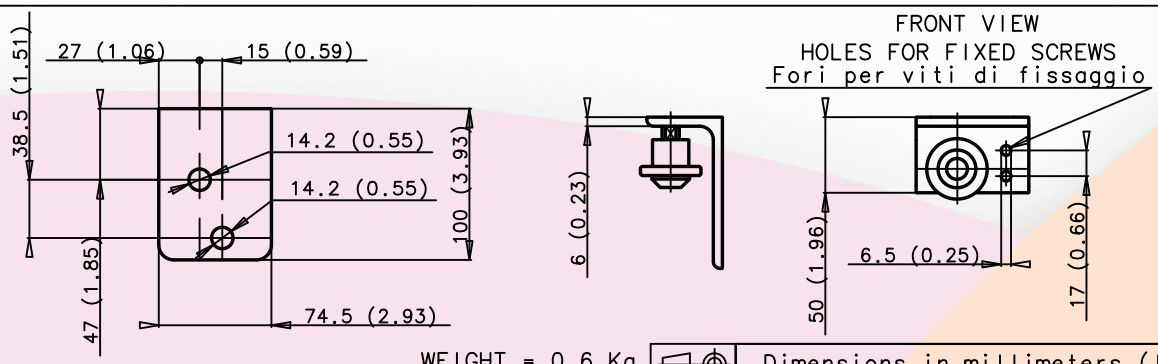

WEIGHT = 0.6 Kg

Dimensions in millimeters (Inch)

GR3-13 MULTICOUPLING

- Three lines size 1/2
- One line predisposed for electrical connector Female EC..-13, Male EC..-13
- On request other line predisposed for electrical connector

GR3-13	MAX. MULTICOUPLING RESISTANCE MAX. RESISTENZA MULTINNESTO	18000 N

FIXED AND MOBILE MULTICOUPLING
Multinnesto Fisso e Mobile

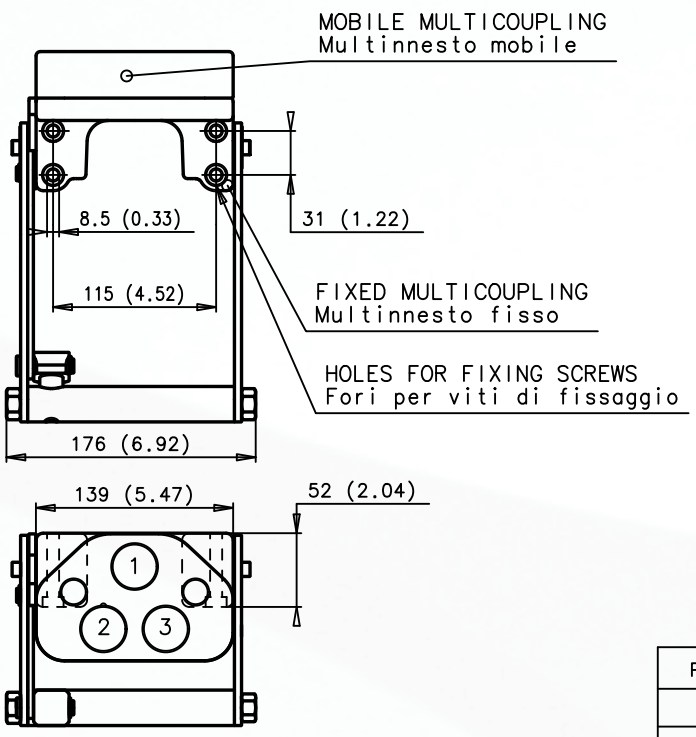

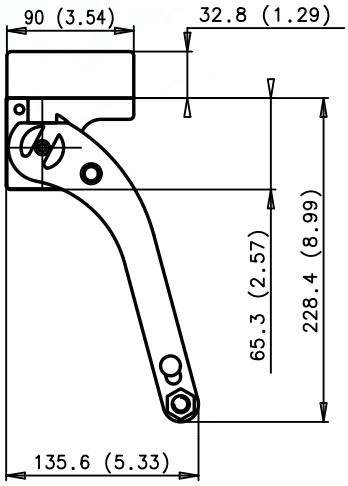

POS.	COUPLING SIZE	PREDISPOSITION FOR ELECTRICAL CONNECTOR
1	1/2	-
2	1/2	YES
3	1/2	-

WEIGHT FIXED HALF = 3.8 Kg
WEIGHT MOBILE HALF = 1.8 Kg

CAP FOR MULTICOUPLING GR3-13
Tappo multinnesto fisso GR3-13

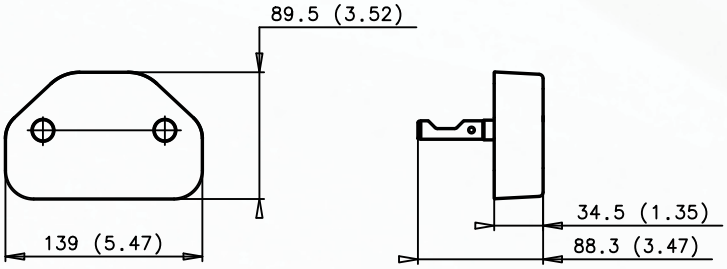

WEIGHT = 0.6 Kg

PARKING STATION GRG3ZF
Stazione di parcheggio GRG3ZF

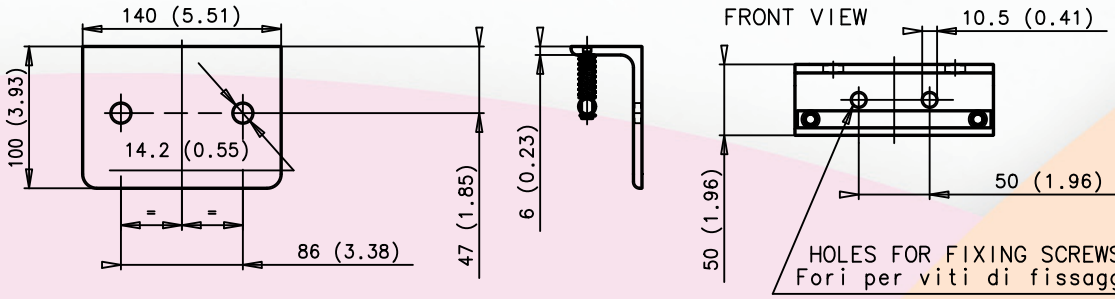

WEIGHT = 1.1 Kg

Dimensions in millimeters (Inch)

GRK3 MULTICOUPLING

- Two lines size 1
- One line size 3/8
- One line predisposed for electrical connector Female EC.., Male EC..D

GRK3	MAX. MULTICOUPLING RESISTANCE MAX. RESISTENZA MULTINNESTO	23000 N

FIXED AND MOBILE MULTICOUPLING
Multinnesto Fisso e Mobile

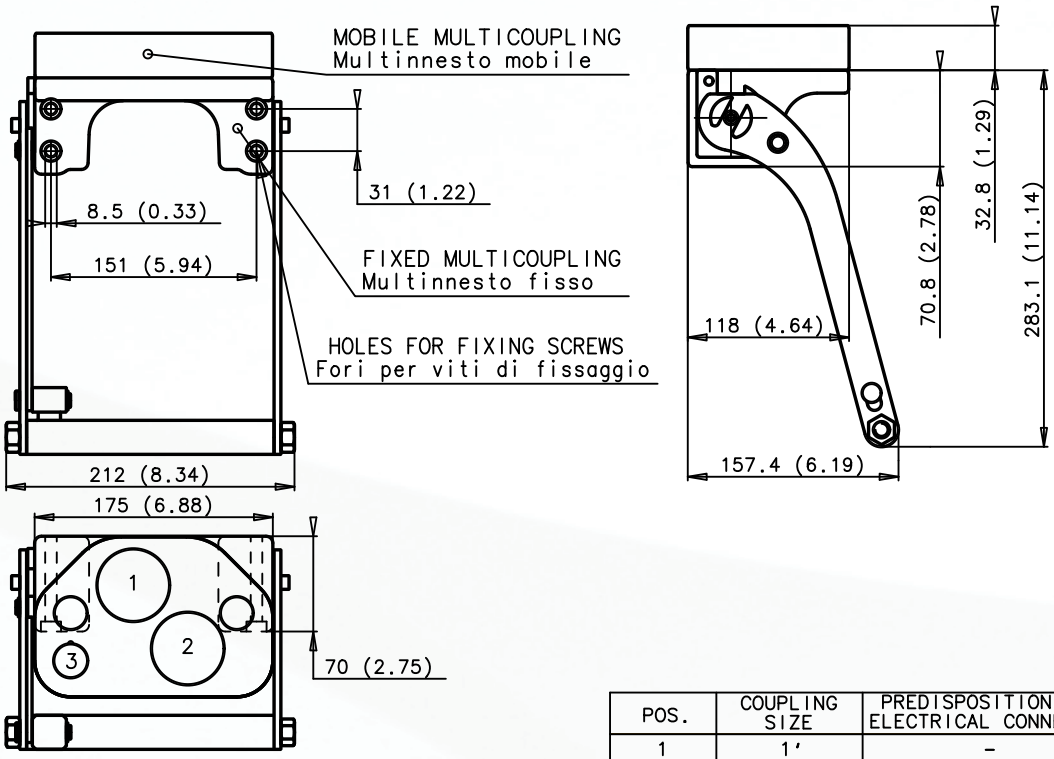

POS.	COUPLING SIZE	PREDISPOSITION FOR ELECTRICAL CONNECTOR
1	1'	-
2	1'	-
3	3/8-D	YES

WEIGHT FIXED HALF = 5.7 Kg
WEIGHT MOBILE HALF = 2.8 Kg

CAP FOR MULTICOUPLING GRK3
Tappo multinnesto fisso GRK3

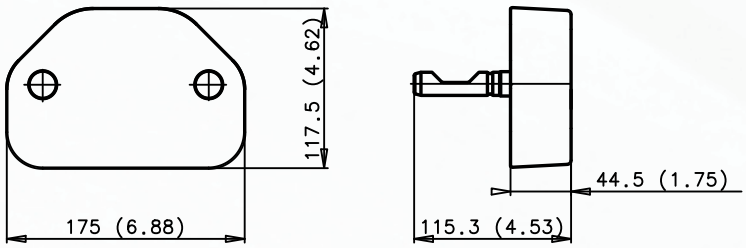

WEIGHT = 1.2 Kg

PARKING STATION GRU6
Stazione di parcheggio GRU6

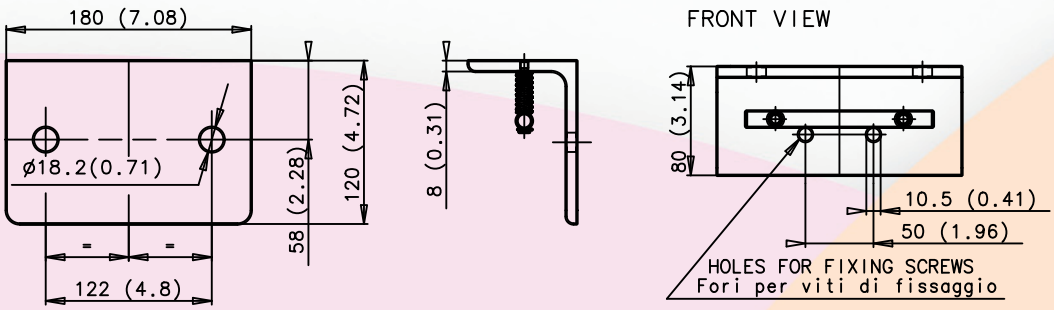

WEIGHT = 2.4 Kg

Dimensions in millimeters (Inch)

GRB4 MULTICOUPLING

- Two lines size 1/2
- Two lines size 3/8
- Two lines predisposed for electrical connector Female EC.., Male EC..D

GRB4	MAX. MULTICOUPLING RESISTANCE MAX. RESISTENZA MULTINNESTO	18000 N

FIXED AND MOBILE MULTICOUPLING
Multinnesto Fisso e Mobile

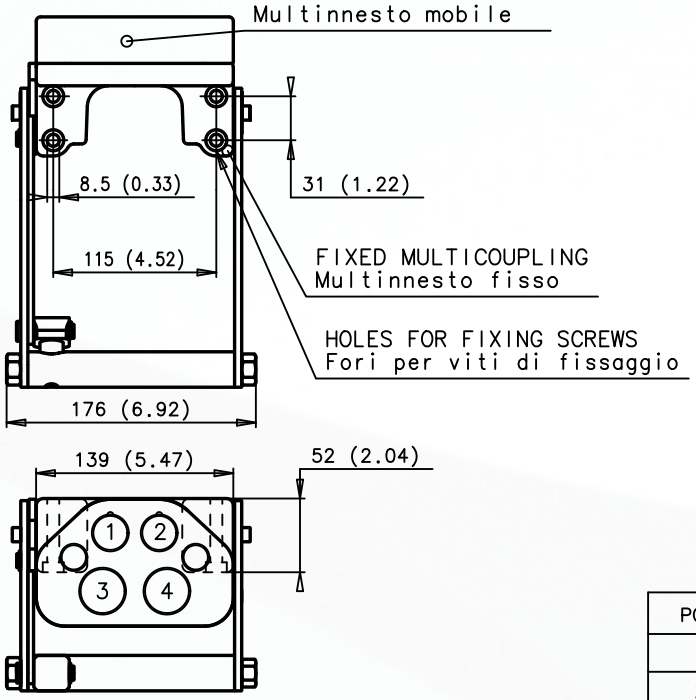

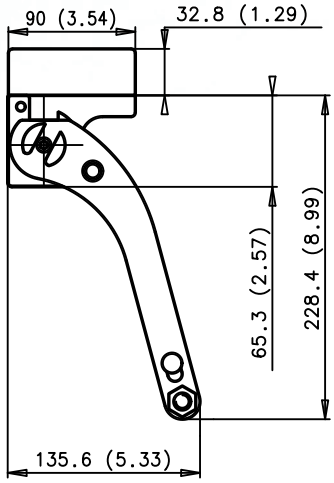

POS.	COUPLING SIZE	PREDISPOSITION FOR ELECTRICAL CONNECTOR
1	3/8-D	YES
2	3/8-D	YES
3	1/2	-
4	1/2	-

WEIGHT FIXED HALF = 3.7 Kg
WEIGHT MOBILE HALF = 1.8 Kg

CAP FOR MULTICOUPLING GR3-13
Tappo multinnesto fisso GR3-13

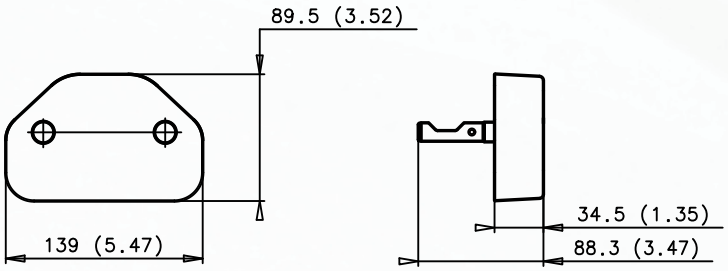

WEIGHT = 0.6 Kg

PARKING STATION GRG3ZF
Stazione di parcheggio GRG3ZF

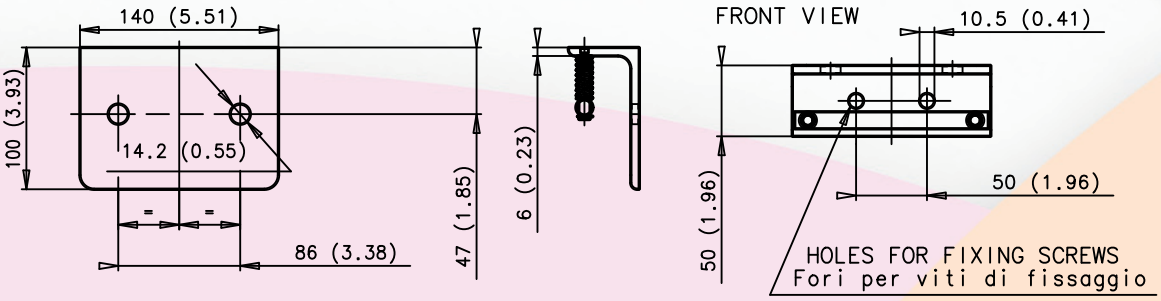

WEIGHT = 1.1 Kg

Dimensions in millimeters (Inch)

GRB4S MULTICOUPLING

- Two lines size 1/2
- Two lines size 3/8
- On request lines predisposed for electrical connector

GRB4S	MAX. MULTICOUPLING RESISTANCE MAX. RESISTENZA MULTINNESTO	18000 N

FIXED AND MOBILE MULTICOUPLING
Multinnesto Fisso e Mobile

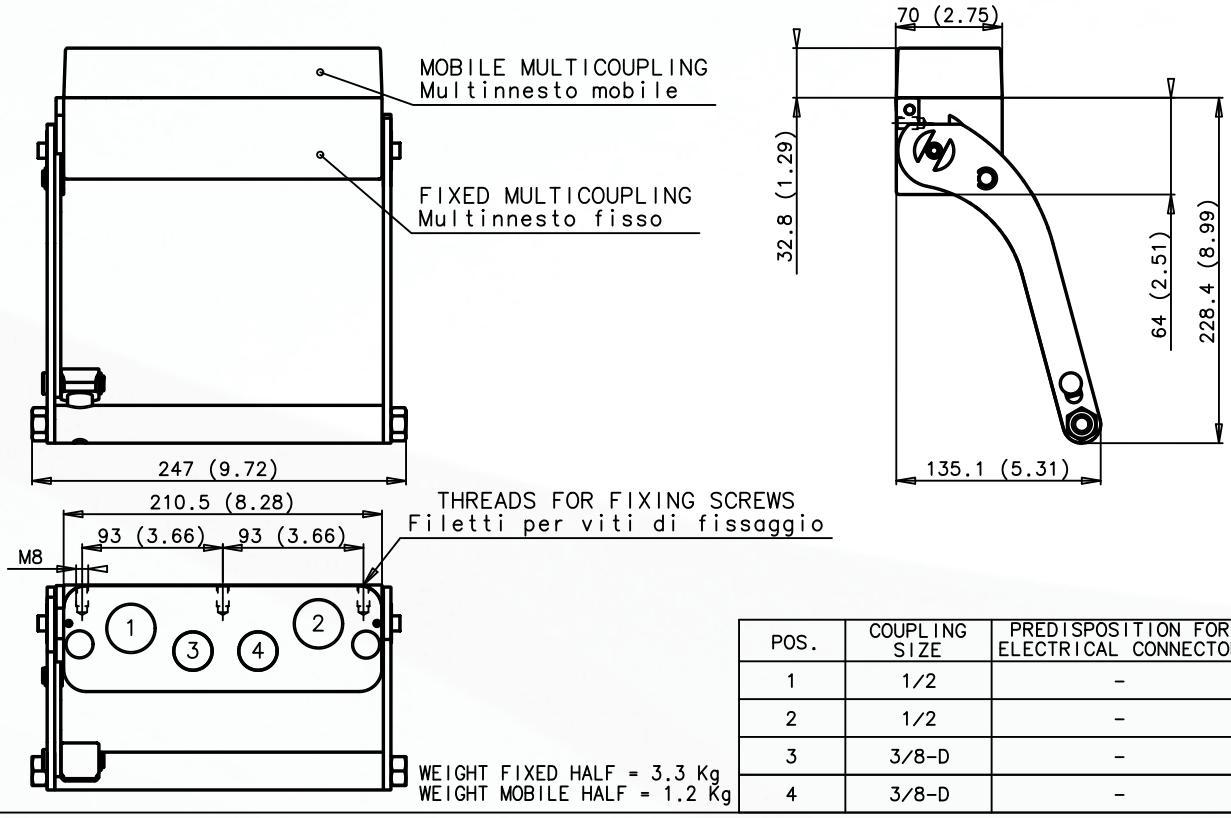

WEIGHT FIXED HALF = 3.3 Kg
WEIGHT MOBILE HALF = 1.2 Kg

POS.	COUPLING SIZE	PREDISPOSITION FOR ELECTRICAL CONNECTOR
1	1/2	-
2	1/2	-
3	3/8-D	-
4	3/8-D	-

CAP FOR MULTICOUPLING GRB4S
Tappo multinnesto fisso GRB4S

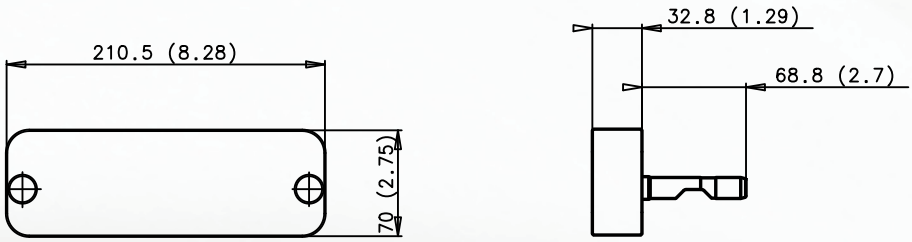

Dimensions in millimeters (Inch)

GRI4SB MULTICOUPLING

- One line size 5/8
- One line size 1/2
- Two lines size 3/8
- Two lines predisposed for electrical connector Female EC.., Male EC..D

GRI4SB	MAX. MULTICOUPLING RESISTANCE MAX. RESISTENZA MULTINNESTO	18000 N

FIXED AND MOBILE MULTICOUPLING
Multinnesto Fisso e Mobile

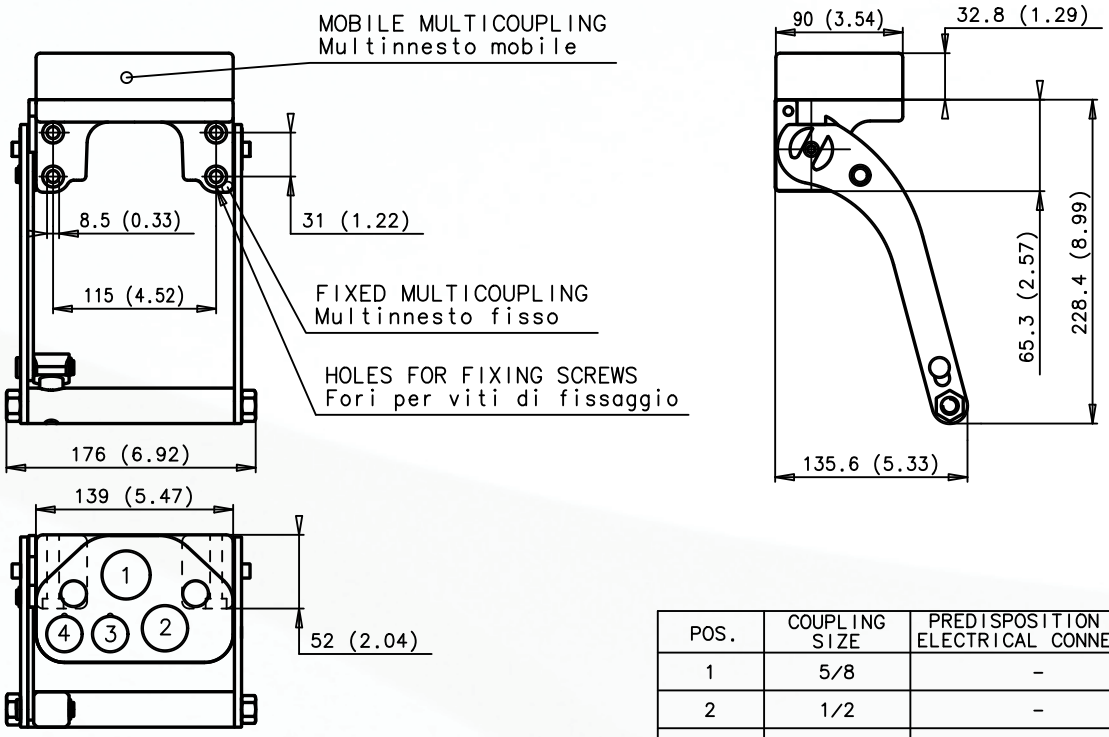

POS.	COUPLING SIZE	PREDISPOSITION FOR ELECTRICAL CONNECTOR
1	5/8	-
2	1/2	-
3	3/8-D	YES
4	3/8-D	YES

WEIGHT FIXED HALF = 3.7 Kg
WEIGHT MOBILE HALF = 1.7 Kg

CAP FOR MULTICOUPLING GRI4
Tappo multinnesto fisso GRI4

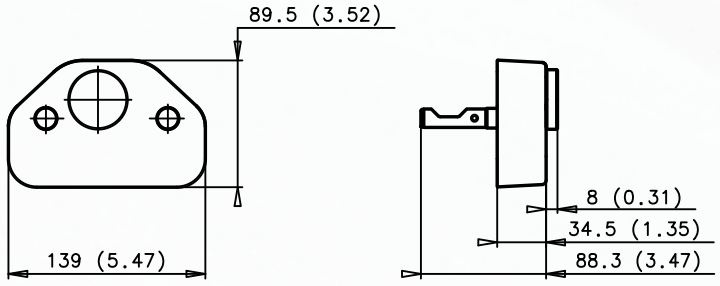

WEIGHT = 0.6 Kg

PARKING STATION GRG3ZF
Stazione di parcheggio GRG3ZF

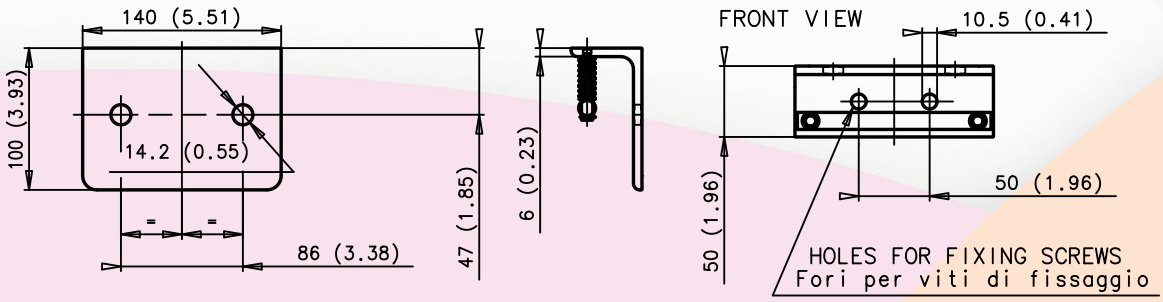

WEIGHT = 1.1 Kg

Dimensions in millimeters (Inch)

GRI4TB MULTICOUPLING

- Two lines size 5/8
- Two lines size 3/8
- Two lines predisposed for electrical connector Female EC.., Male EC..D

GRI4TB

MAX. MULTICOUPLING RESISTANCE
MAX. RESISTENZA MULTINNESTO 18000 N

FIXED AND MOBILE MULTICOUPLING
Multinnesto Fisso e Mobile

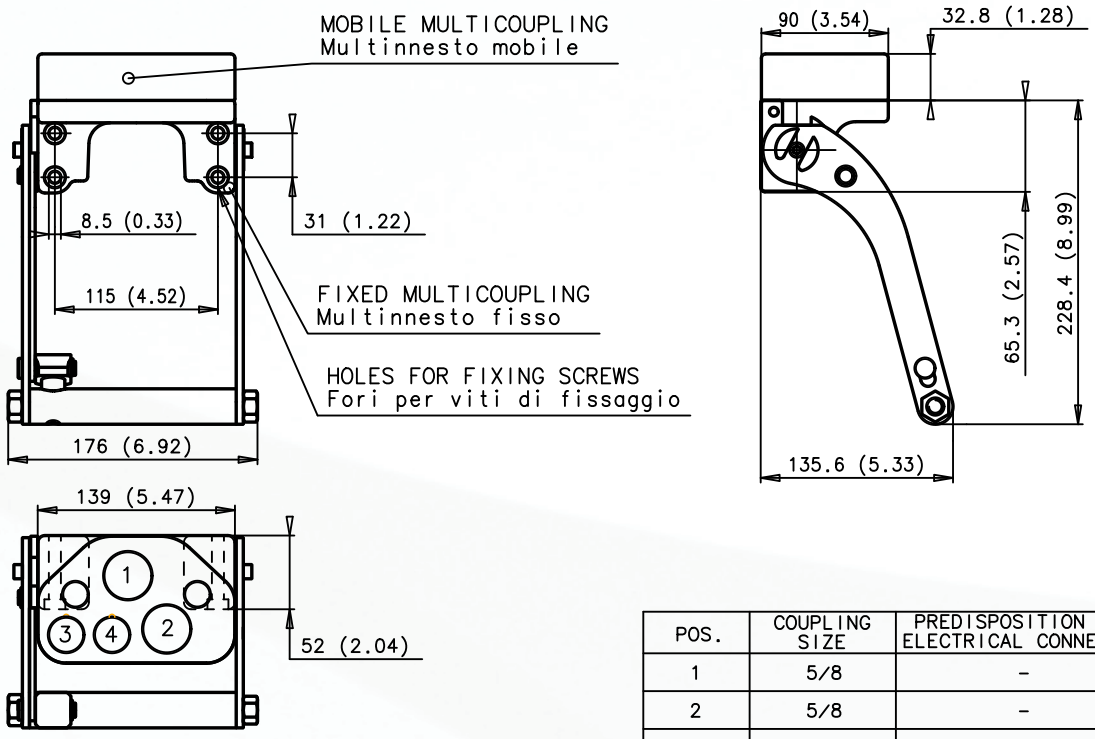

POS.	COUPLING SIZE	PREDISPOSITION FOR ELECTRICAL CONNECTOR
1	5/8	-
2	5/8	-
3	3/8-D	YES
4	3/8-D	YES

WEIGHT FIXED HALF = 3.7 Kg
WEIGHT MOBILE HALF = 1.7 Kg

CAP FOR MULTICOUPLING GRI4ZF
Tappo multinnesto fisso GRI4ZF

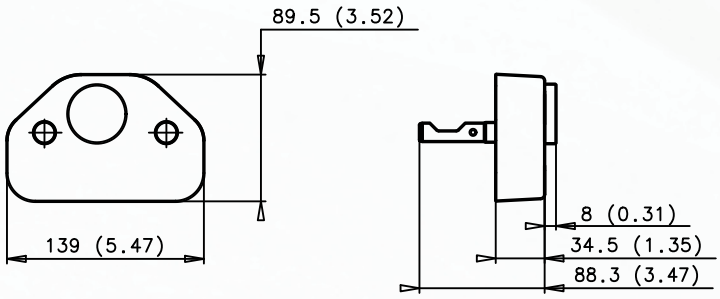

WEIGHT = 0.6 Kg

PARKING STATION GRG3ZF
Stazione di parcheggio GRG3ZF

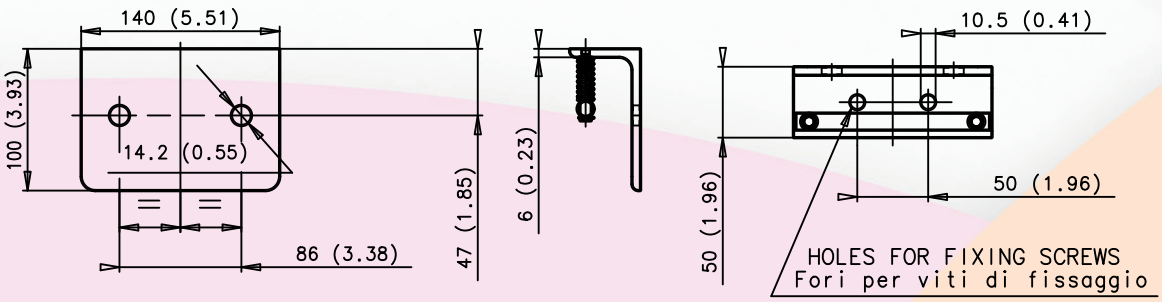

WEIGHT = 1.1 Kg

Dimensions in millimeters (Inch)

GR4MR MULTICOUPLING

- One line size 3/4
- One line size 1/2
- Two lines size 3/8
- Two lines predisposed for electrical connector Female EC.., Male EC..D
- One hole for optional sensor

GR4MR	MAX. MULTICOUPLING RESISTANCE MAX. RESISTENZA MULTINNESTO	18000 N

FIXED AND MOBILE MULTICOUPLING
Multinnesto Fisso e Mobile

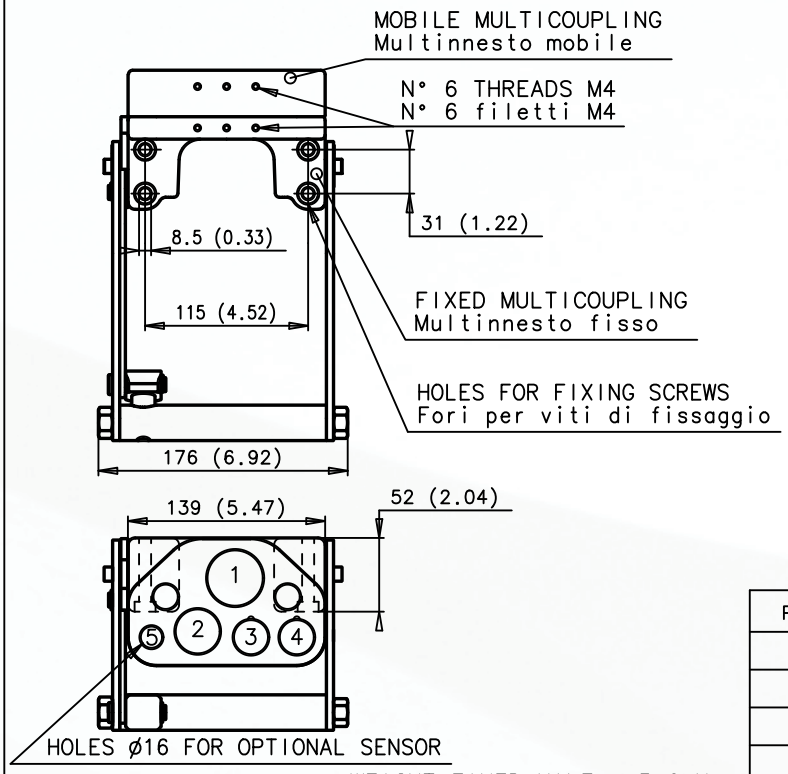

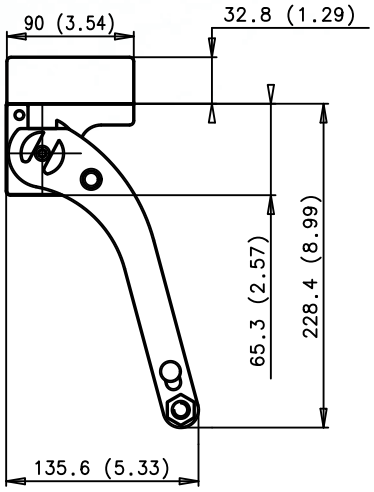

POS.	COUPLING SIZE	PREDISPOSITION FOR ELECTRICAL CONNECTOR
1	3/4	-
2	1/2	-
3	3/8-D	YES
4	3/8-D	YES
5	-	-

WEIGHT FIXED HALF = 3.6 Kg
WEIGHT MOBILE HALF = 1.7 Kg

CAP FOR MULTICOUPLING GR4MR
Tappo multinnesto fisso GR4MR

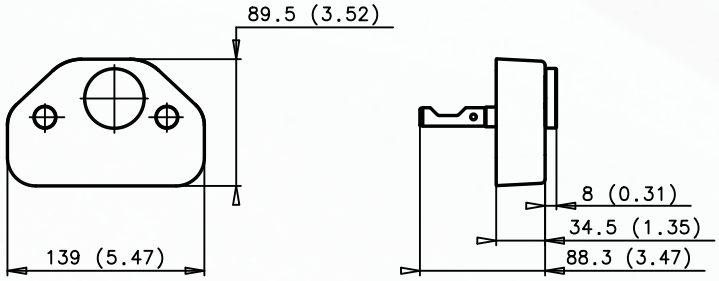

WEIGHT = 0.6 Kg

PARKING STATION GRG3ZF
Stazione di parcheggio GRG3ZF

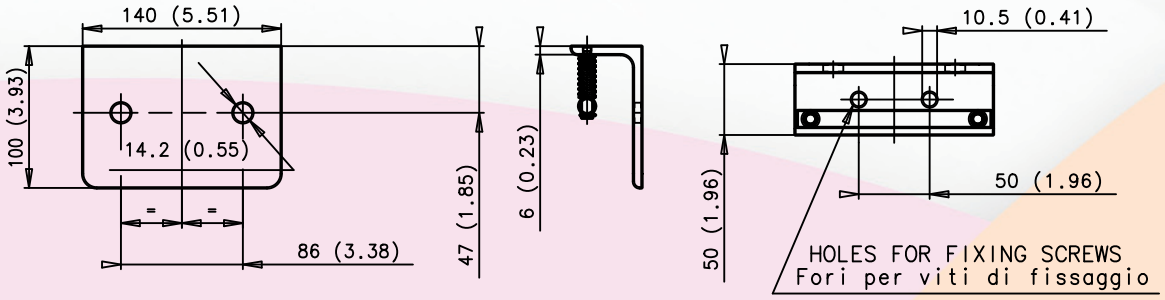

WEIGHT = 1.1 Kg

Dimensions in millimeters (Inch)

GRI4 MULTICOUPLING

- One line size 3/4
- One line size 5/8
- Two lines size 3/8
- Two lines predisposed for electrical connector Female EC.., Male EC..D

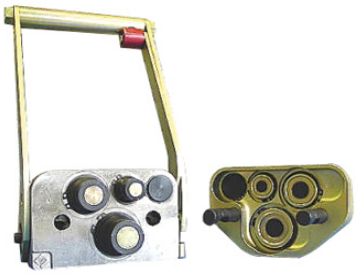

GRI4	MAX. MULTICOUPLING RESISTANCE MAX. RESISTENZA MULTINNESTO	18000 N

FIXED AND MOBILE MULTICOUPLING
Multinnesto Fisso e Mobile

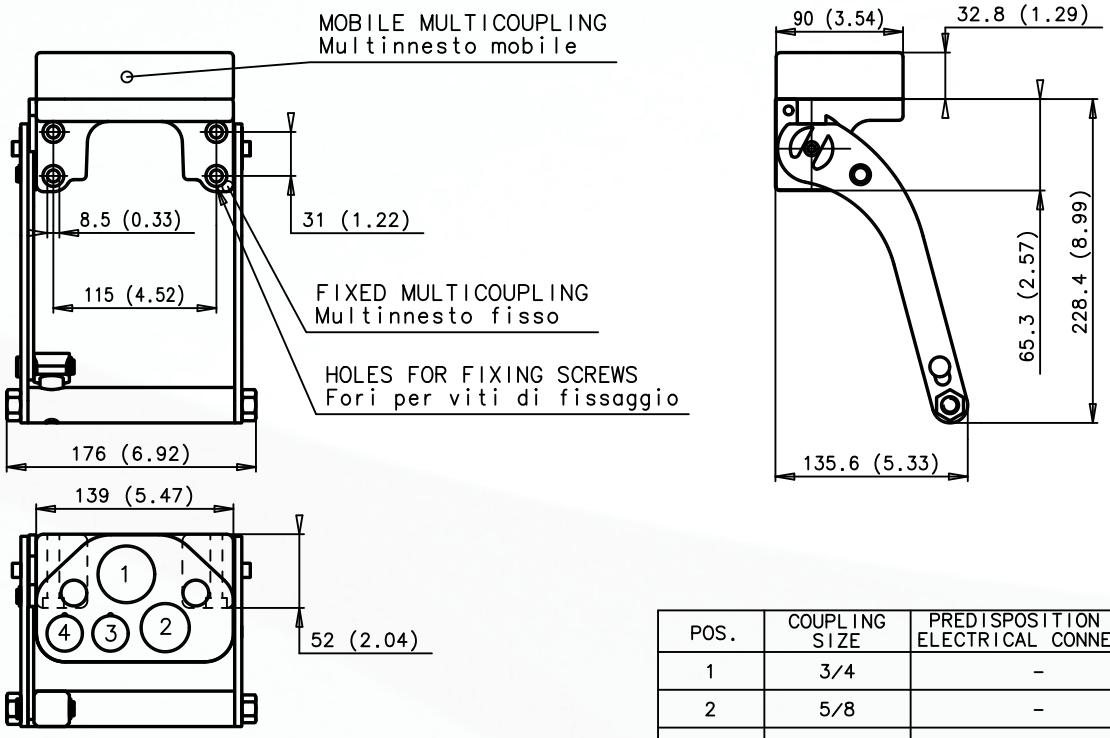

POS.	COUPLING SIZE	PREDISPOSITION FOR ELECTRICAL CONNECTOR
1	3/4	-
2	5/8	-
3	3/8-D	YES
4	3/8-D	YES

WEIGHT FIXED HALF = 3.6 Kg
WEIGHT MOBILE HALF = 1.7 Kg

CAP FOR MULTICOUPLING GRI4
Tappo multinnesto fisso GRI4

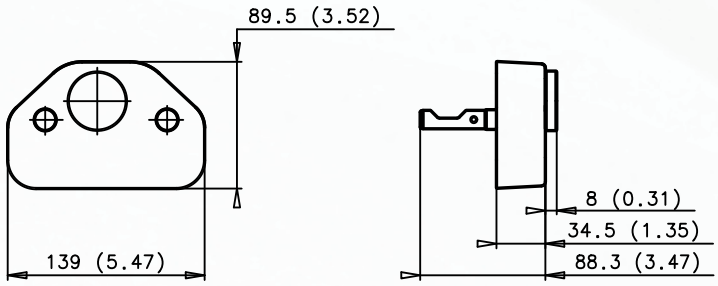

WEIGHT = 0.6 Kg

PARKING STATION GRG3ZF
Stazione di parcheggio GRG3ZF

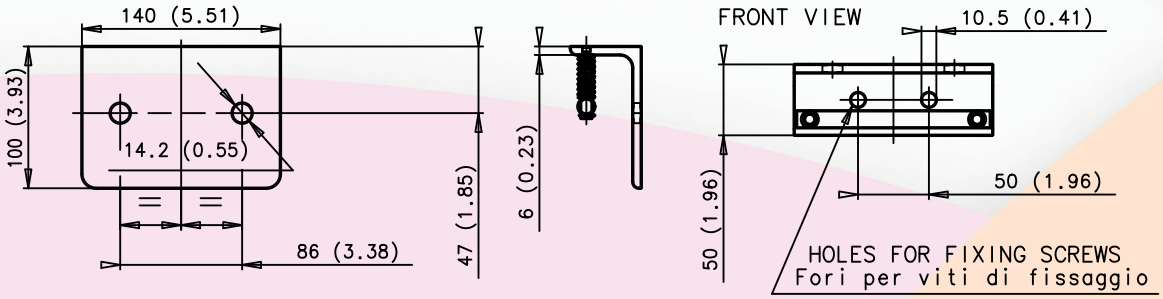

WEIGHT = 1.1 Kg

Dimensions in millimeters (Inch)

GRV5I MULTICOUPLING

- To assemble directly on distributor valve Walvoil SDM143/DLM142, Nimco CV452
- Five lines size 3/8
- One line predisposed for electrical connector Female EC.., Male EC..

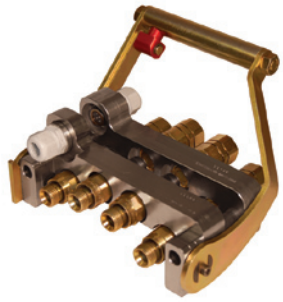

GRV5 I	MAX. MULTICOUPLING RESISTANCE MAX. RESISTENZA MULTINNESTO	12500 N

FIXED AND MOBILE MULTICOUPLING
Multinnesto Fisso e Mobile

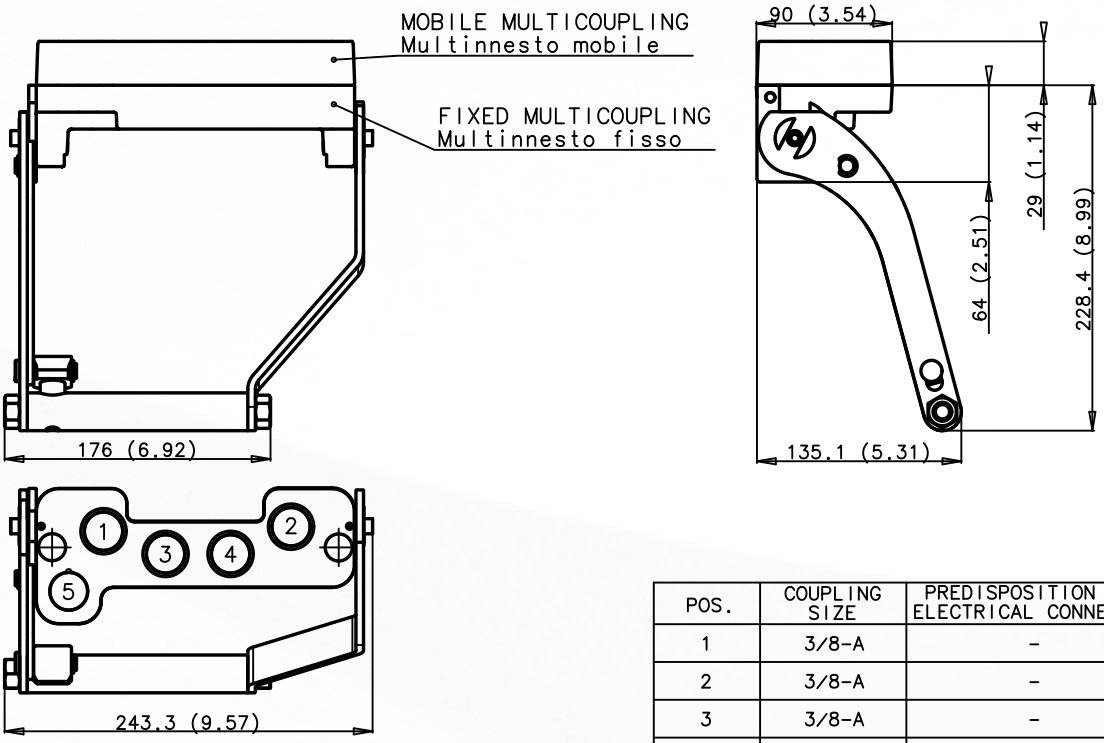

POS.	COUPLING SIZE	PREDISPOSITION FOR ELECTRICAL CONNECTOR
1	3/8-A	-
2	3/8-A	-
3	3/8-A	-
4	3/8-A	-
5	-	YES

WEIGHT FIXED HALF = 3.8 Kg
WEIGHT MOBILE HALF = 1.8 Kg

CAP FOR MULTICOUPLING GRV5I
Tappo multinnesto fisso GRV5I

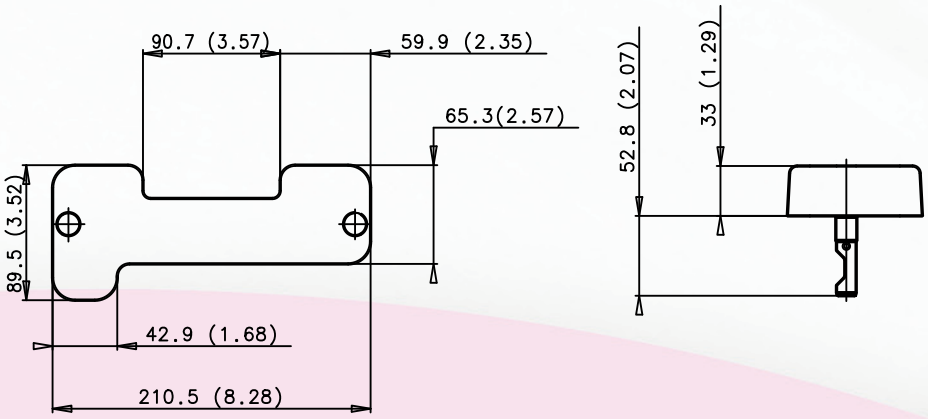

WEIGHT = 0.8 Kg

Dimensions in millimeters (Inch)

GR5AA MULTICOUPLING

- Three lines size 3/4
- Two lines size 1/2
- On request lines predisposed for electrical connector

GR5AA	MAX. MULTICOUPLING RESISTANCE MAX. RESISTENZA MULTINNESTO	23000 N

FIXED AND MOBILE MULTICOUPLING
Multinnesto Fisso e Mobile

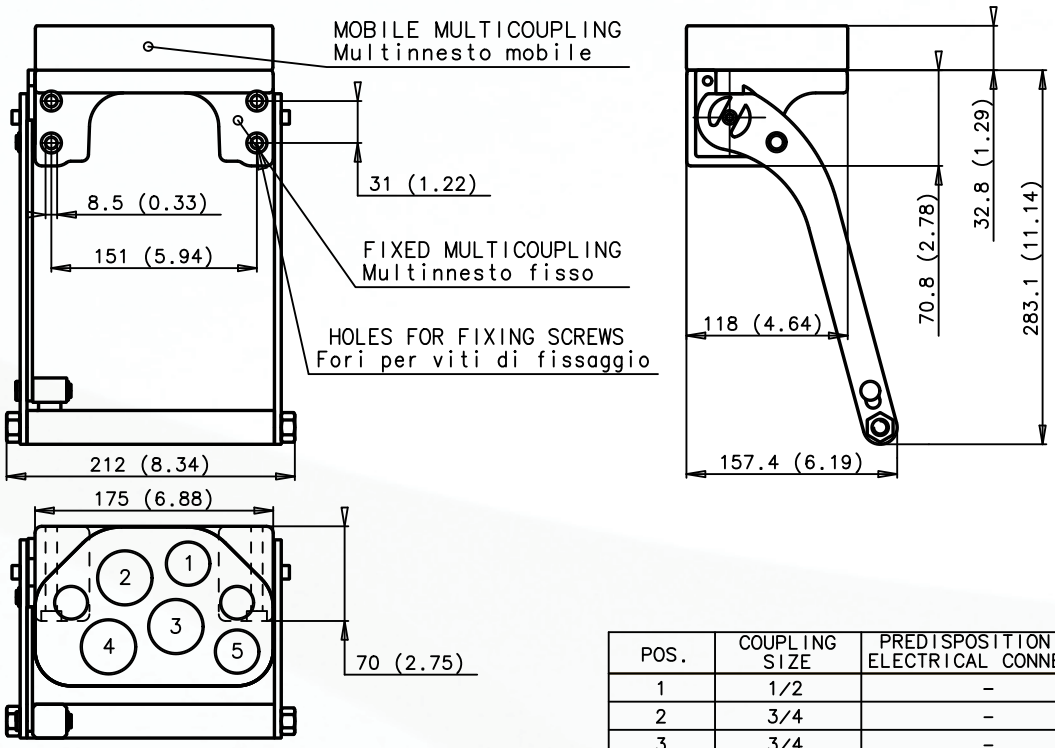

POS.	COUPLING SIZE	PREDISPOSITION FOR ELECTRICAL CONNECTOR
1	1/2	-
2	3/4	-
3	3/4	-
4	3/4	-
5	1/2	-

WEIGHT FIXED HALF = 5.5 Kg
WEIGHT MOBILE HALF = 2.7 Kg

CAP FOR MULTICOUPLING GR6AB
Tappo multinnesto fisso GR6AB

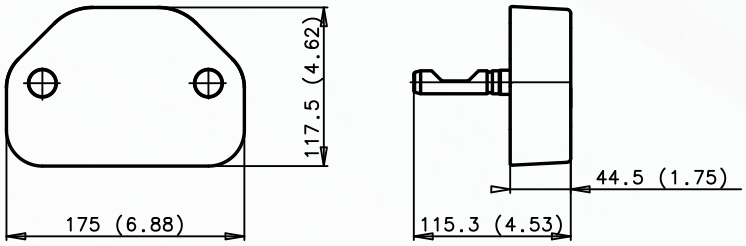

WEIGHT = 1.2 Kg

PARKING STATION GRU6
Stazione di parcheggio GRU6

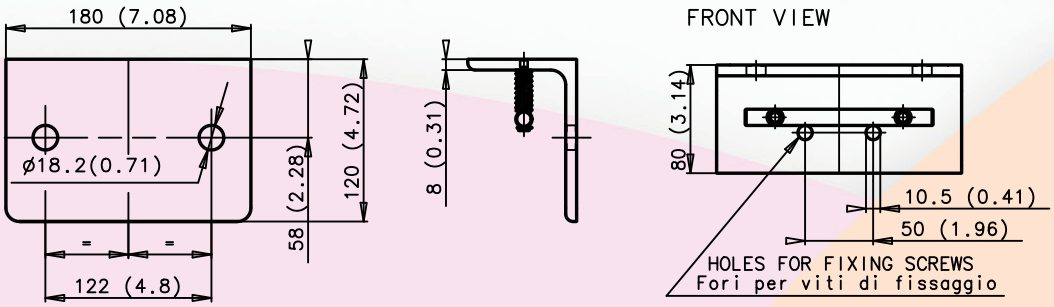

WEIGHT = 2.4 Kg

Dimensions in millimeters (Inch)

GRZ5 MULTICOUPLING

- One line size 1
- Two lines size 5/8
- Two lines size 1/2
- On request lines predisposed for electrical connector

GRZ5	MAX. MULTICOUPLING RESISTANCE MAX. RESISTENZA MULTINNESTO	23000 N

FIXED AND MOBILE MULTICOUPLING
Multinnesto Fisso e Mobile

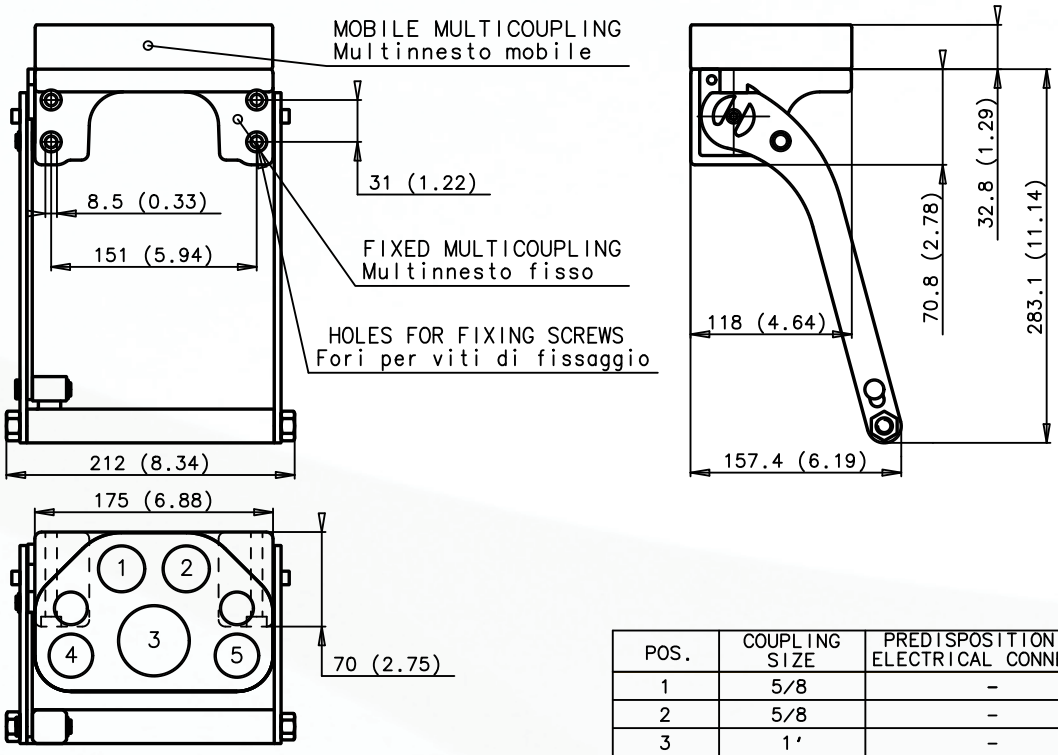

POS.	COUPLING SIZE	PREDISPOSITION FOR ELECTRICAL CONNECTOR
1	5/8	-
2	5/8	-
3	1'	-
4	1/2	-
5	1/2	-

WEIGHT FIXED HALF = 5.5 Kg
WEIGHT MOBILE HALF = 2.6 Kg

CAP FOR MULTICOUPLING GRZ5
Tappo multinnesto fisso GRZ5

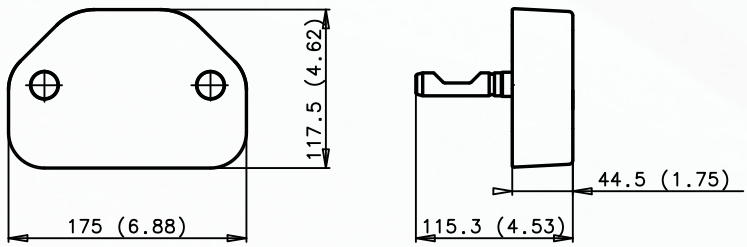

WEIGHT = 1.2 Kg

PARKING STATION GRU6
Stazione di parcheggio GRU6

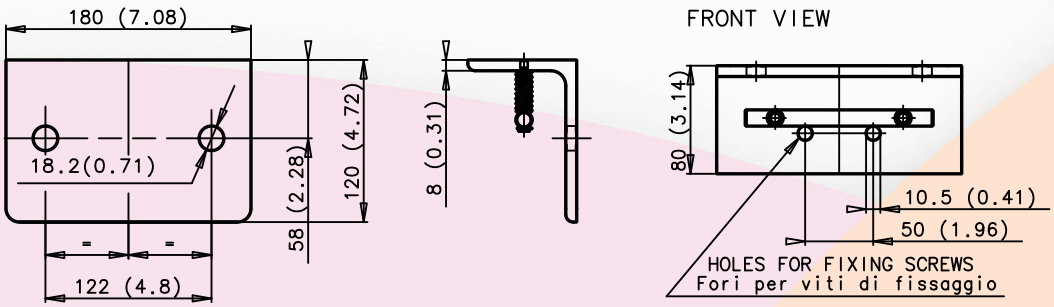

WEIGHT = 2.4 Kg

Dimensions in millimeters (Inch)

GRD5 MULTICOUPLING

- One line size 1
- One line size 3/4
- Three lines size 3/8
- Two lines predisposed for electrical connector Female EC.., Male EC..D

GRD5	MAX. MULTICOUPLING RESISTANCE MAX. RESISTENZA MULTINNESTO	23000 N

FIXED AND MOBILE MULTICOUPLING
Multinnesto Fisso e Mobile

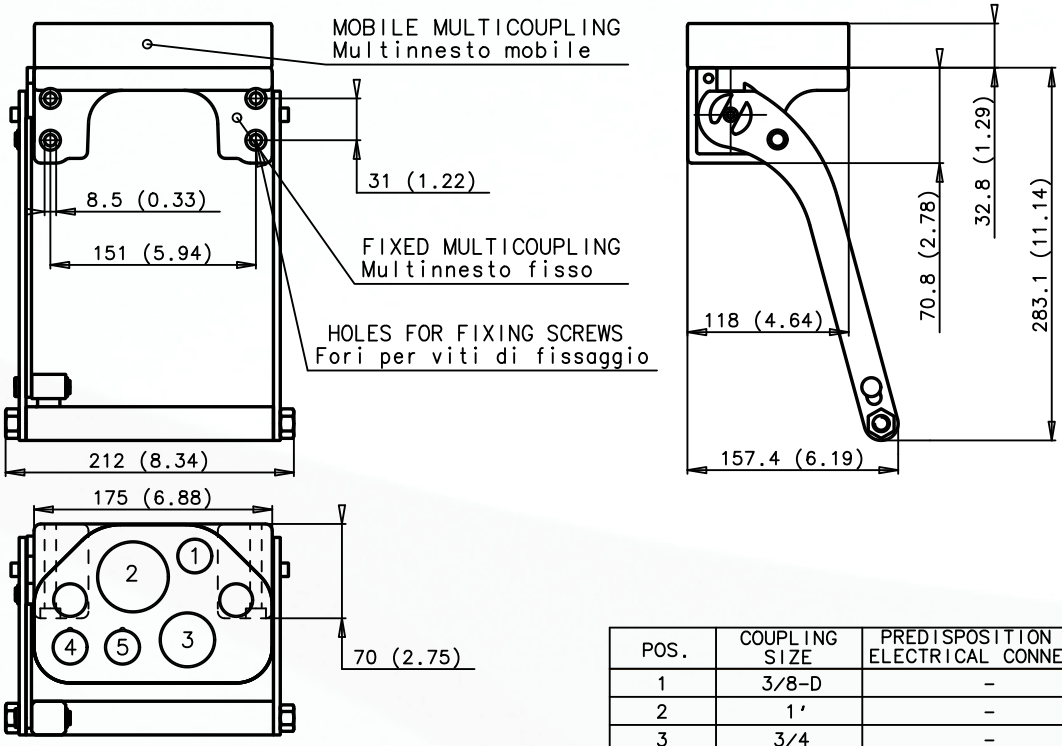

POS.	COUPLING SIZE	PREDISPOSITION FOR ELECTRICAL CONNECTOR
1	3/8-D	-
2	1'	-
3	3/4	-
4	3/8-D	YES
5	3/8-D	YES

WEIGHT FIXED HALF = 5.6 Kg
WEIGHT MOBILE HALF = 2.8 Kg

CAP FOR MULTICOUPLING GRD5
Tappo multinnesto fisso GRD5

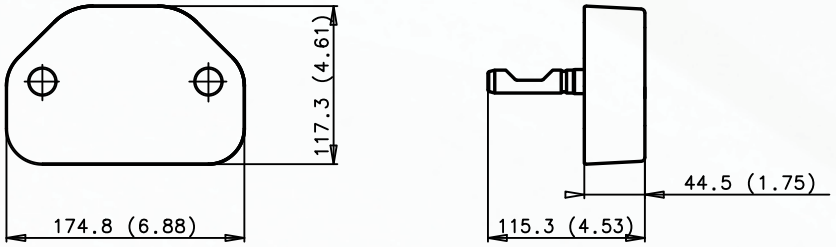

WEIGHT = 1.2 Kg

PARKING STATION GRU6
Stazione di parcheggio GRU6

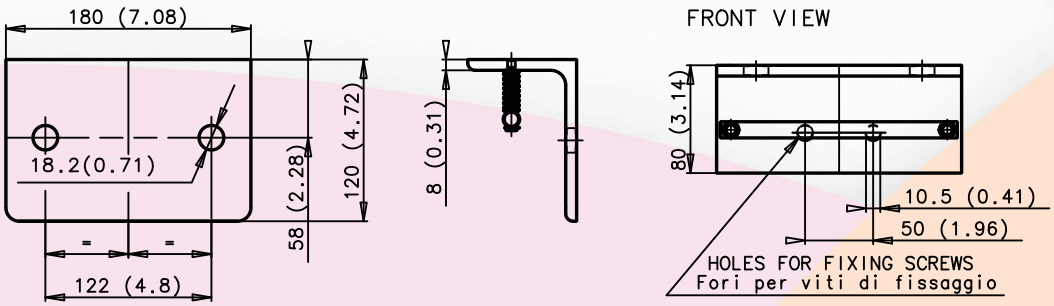

WEIGHT = 2.4 Kg

Dimensions in millimeters (Inch)

GR6-9 MULTICOUPLING

- Six lines size 3/8
- Two lines predisposed for electrical connector Female EC.., Male EC..
- On request others lines predisposed for electrical connector

GR6-9	MAX. MULTICOUPLING RESISTANCE MAX. RESISTENZA MULTINNESTO	18000 N

FIXED AND MOBILE MULTICOUPLING
Multinnesto Fisso e Mobile

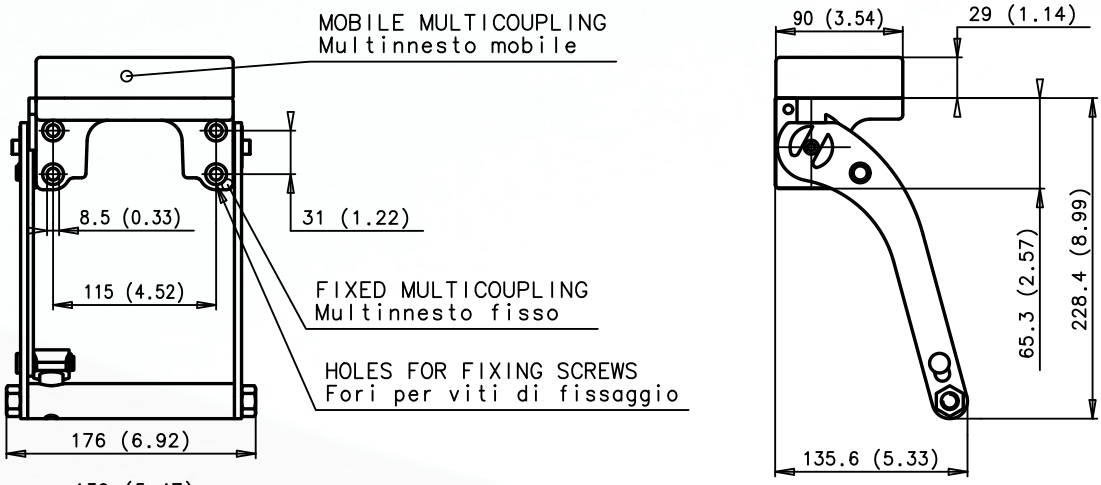

POS.	COUPLING SIZE	PREDISPOSITION FOR ELECTRICAL CONNECTOR
1	3/8-A	-
2	3/8-A	-
3	3/8-A	-
4	3/8-A	-
5	3/8-A	YES
6	3/8-A	YES

WEIGHT FIXED HALF = 3.7 Kg
WEIGHT MOBILE HALF = 1.5 Kg

CAP FOR MULTICOUPLING GR6-9
Tappo multinnesto fisso GR6-9

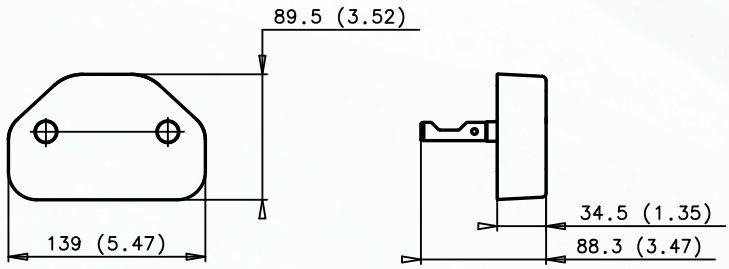

WEIGHT = 0.6 Kg

PARKING STATION GRG3ZF
Stazione di parcheggio GRG3ZF

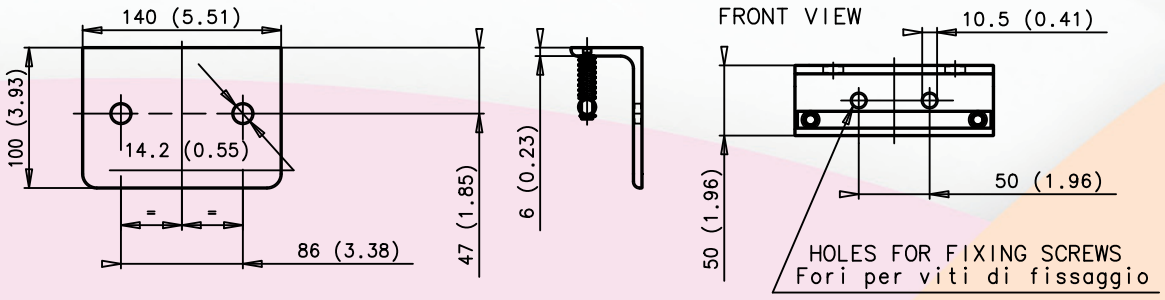

WEIGHT = 1.1 Kg

Dimensions in millimeters (Inch)

GRT6 MULTICOUPLING

- Two lines size 1/2
- Four lines size 3/8
- Two lines predisposed for electrical connector Female EC.., Male EC..D
- On request others lines predisposed for electrical connector

GRT6	MAX. MULTICOUPLING RESISTANCE MAX. RESISTENZA MULTINNESTO	23000 N

FIXED AND MOBILE MULTICOUPLING
Multinnesto Fisso e Mobile

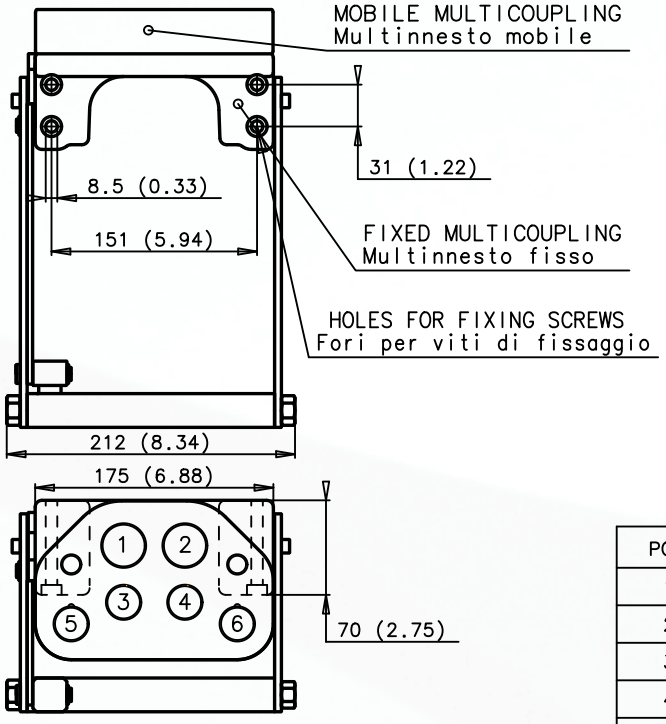

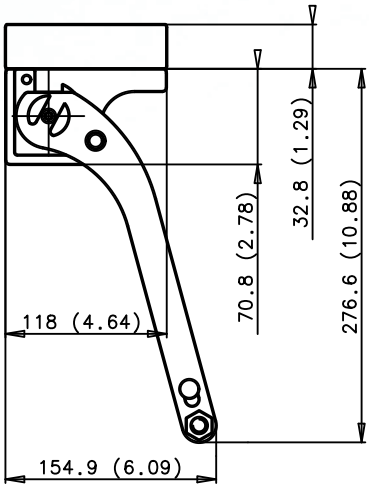

POS.	COUPLING SIZE	PREDISPOSITION FOR ELECTRICAL CONNECTOR
1	1/2	-
2	1/2	-
3	3/8-D	-
4	3/8-D	-
5	3/8-D	YES
6	3/8-D	YES

WEIGHT FIXED HALF = 5.9 Kg
WEIGHT MOBILE HALF = 2.8 Kg

CAP FOR MULTICOUPLING GR6-13
Tappo multinnesto fisso GR6-13

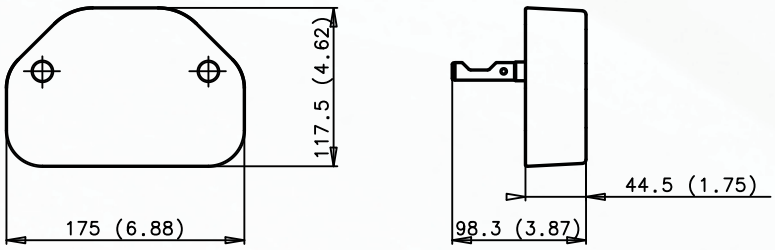

WEIGHT = 1.1 Kg

PARKING STATION GR6-13
Stazione di parcheggio GR6-13

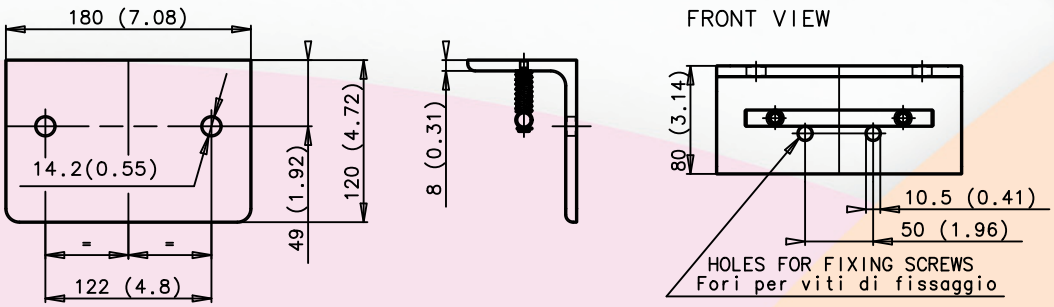

WEIGHT = 2.2 Kg

Dimensions in millimeters (Inch)

GR6-13 MULTICOUPLING

- Six lines size 1/2
- Two lines predisposed for electrical connector Female EC..-13, Male EC..-13
- On request others lines predisposed for electrical connector

GR6-13

MAX. MULTICOUPLING RESISTANCE
MAX. RESISTENZA MULTINNESTO 23000 N

FIXED AND MOBILE MULTICOUPLING
Multinnesto Fisso e Mobile

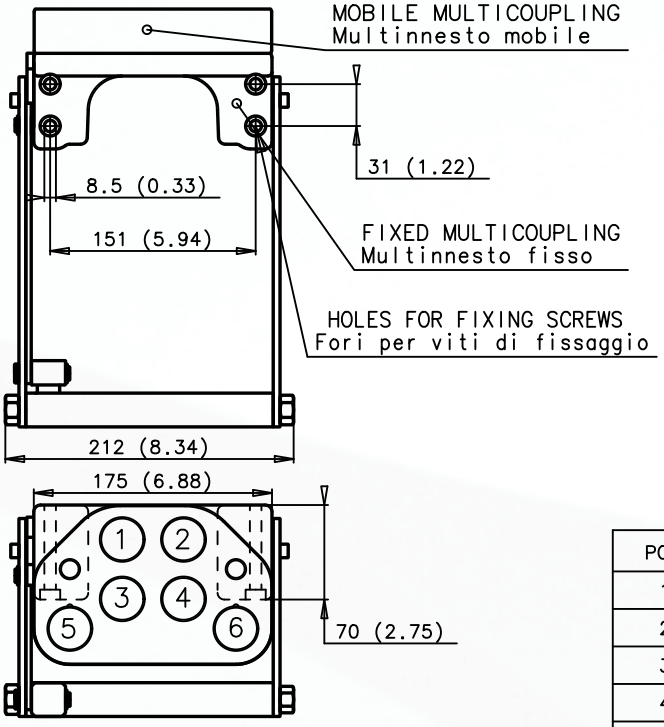

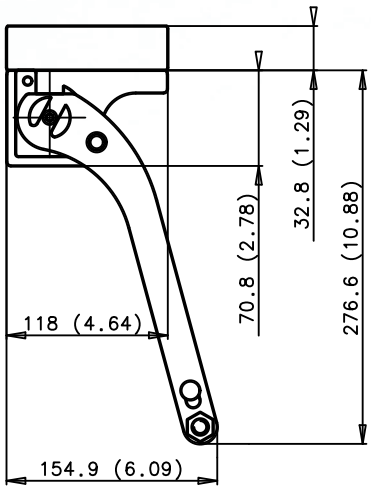

POS.	COUPLING SIZE	PREDISPOSITION FOR ELECTRICAL CONNECTOR
1	1/2	-
2	1/2	-
3	1/2	-
4	1/2	-
5	1/2	YES
6	1/2	YES

WEIGHT FIXED HALF = 5.8 Kg
WEIGHT MOBILE HALF = 2.7 Kg

CAP FOR MULTICOUPLING GR6-13
Tappo multinnesto fisso GR6-13

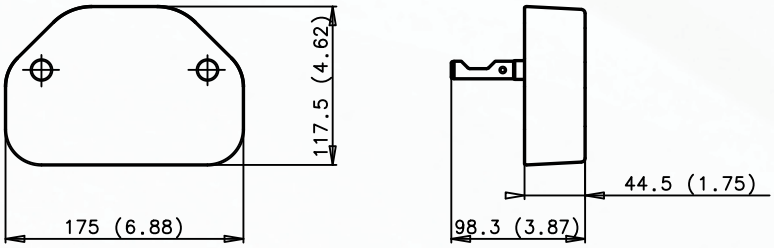

WEIGHT = 1.1 Kg

PARKING STATION GR6-13
Stazione di parcheggio GR6-13

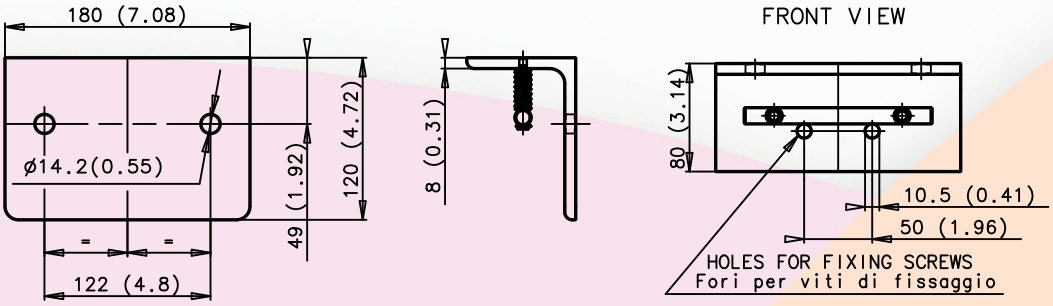

WEIGHT = 2.2 Kg

Dimensions in millimeters (Inch)

GRM6MC MULTICOUPLING

- Two lines size 5/8
- Two lines size 1/2
- Two lines size 3/8
- Two lines predisposed for electrical connector Female EC.., Male EC..D
- On request others lines predisposed for electrical connector

GRM6MC	MAX. MULTICOUPLING RESISTANCE MAX. RESISTENZA MULTINNESTO	23000 N

FIXED AND MOBILE MULTICOUPLING
Multinnesto Fisso e Mobile

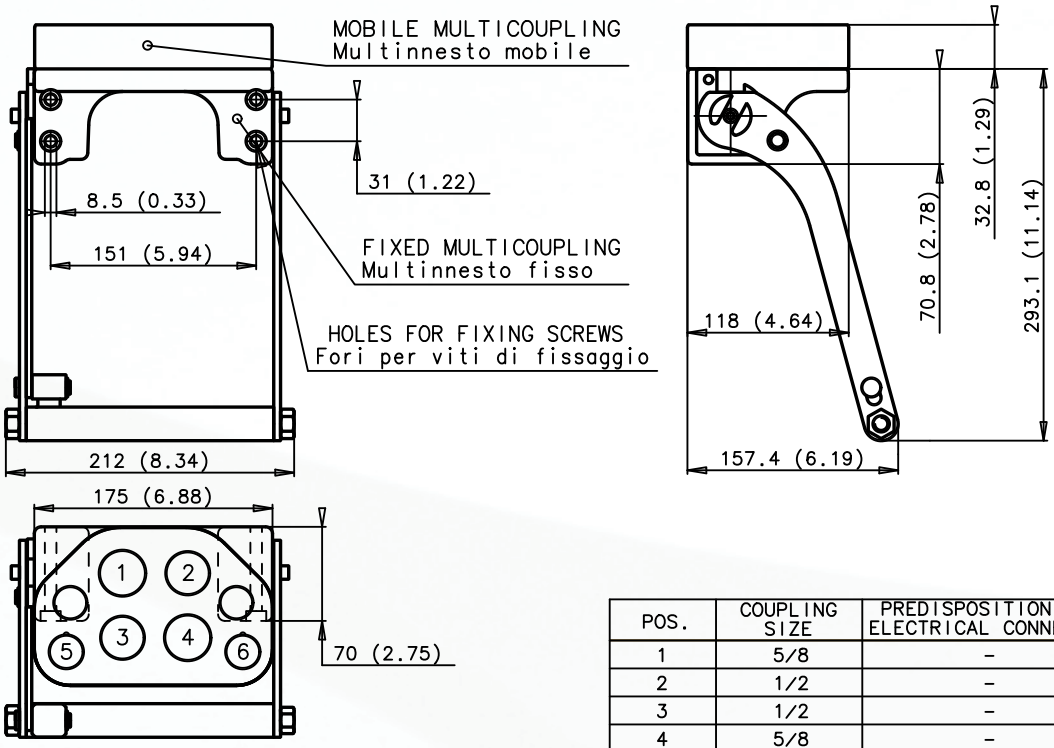

POS.	COUPLING SIZE	PREDISPOSITION FOR ELECTRICAL CONNECTOR
1	5/8	-
2	1/2	-
3	1/2	-
4	5/8	-
5	3/8-D	YES
6	3/8-D	YES

WEIGHT FIXED HALF = 5.700 Kg
WEIGHT MOBILE HALF = 2.900 Kg

CAP FOR MULTICOUPLING GRU6
Tappo multinnesto fisso GRU6

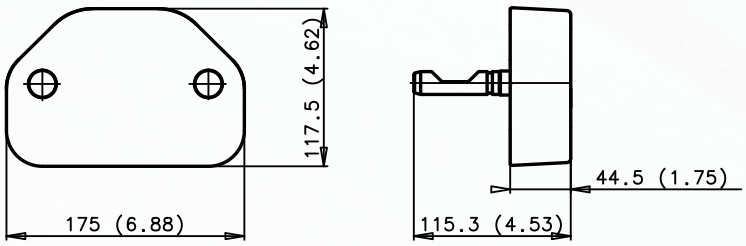

WEIGHT= 1.2 Kg

PARKING STATION GRU6
Stazione di parcheggio GRU6

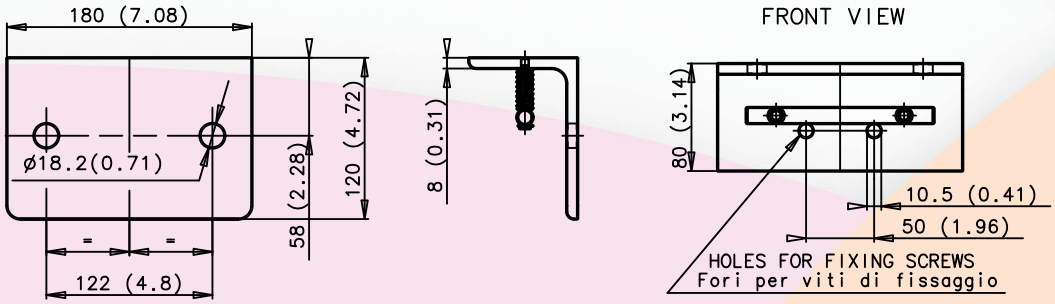

WEIGHT= 2.4 Kg

Dimensions in millimeters (Inch)

GRM6AL MULTICOUPLING

- Four lines size 5/8
- Two lines size 3/8
- Two lines predisposed for electrical connector Female EC.., Male EC..D

GRM6AL	MAX. MULTICOUPLING RESISTANCE MAX. RESISTENZA MULTINNESTO	23000 N

FIXED AND MOBILE MULTICOUPLING
Multinnesto Fisso e Mobile

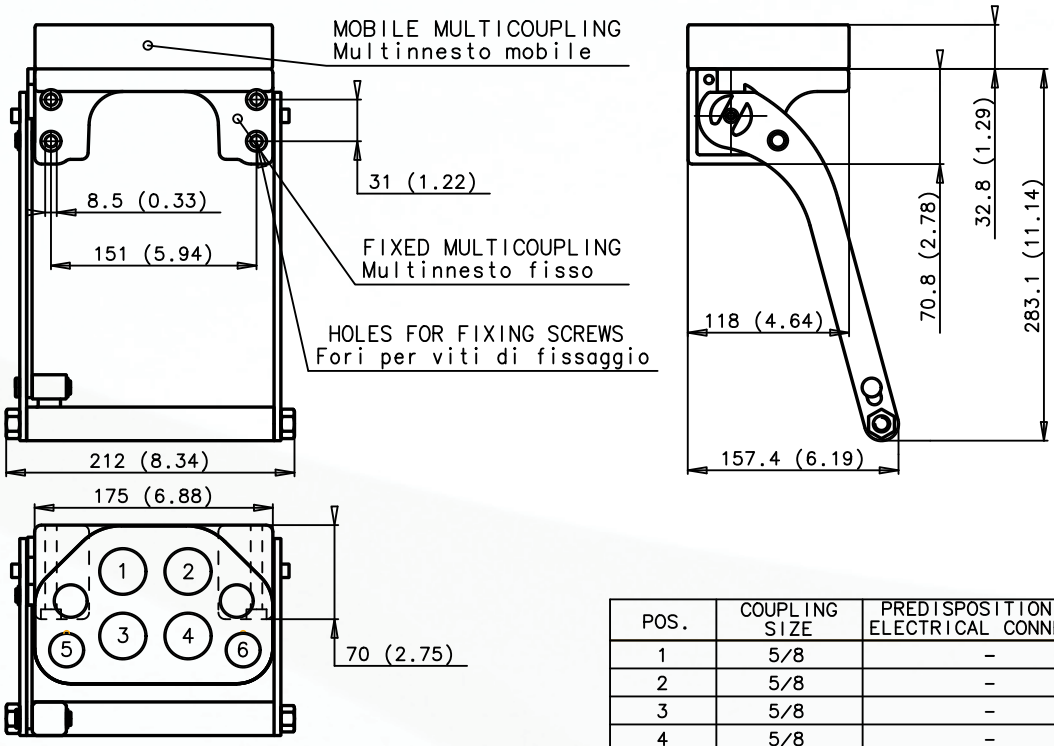

POS.	COUPLING SIZE	PREDISPOSITION FOR ELECTRICAL CONNECTOR
1	5/8	–
2	5/8	–
3	5/8	–
4	5/8	–
5	3/8-D	YES
6	3/8-D	YES

WEIGHT FIXED HALF = 5.6 Kg
WEIGHT MOBILE HALF = 2.9 Kg

CAP FOR MULTICOUPLING GR6AB
Tappo multinnesto fisso GR6AB

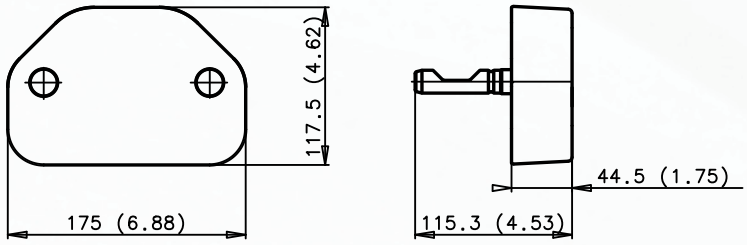

WEIGHT = 1.2 Kg

PARKING STATION GRU6
Stazione di parcheggio GRU6

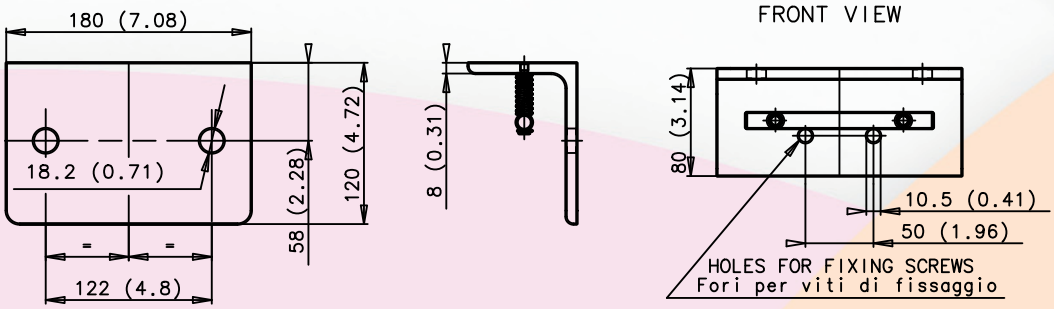

WEIGHT = 2.4 Kg

Dimensions in millimeters (Inch)

GRC6 MULTICOUPLING

- One line size 3/4
- One line size 5/8
- One line size 1/2
- Three lines size 3/8
- Two lines predisposed for electrical connector Female EC.., Male EC..D
- On request others lines predisposed for electrical connector

GRC6	MAX. MULTICOUPLING RESISTANCE MAX. RESISTENZA MULTINNESTO	23000 N

FIXED AND MOBILE MULTICOUPLING
Multinnesto Fisso e Mobile

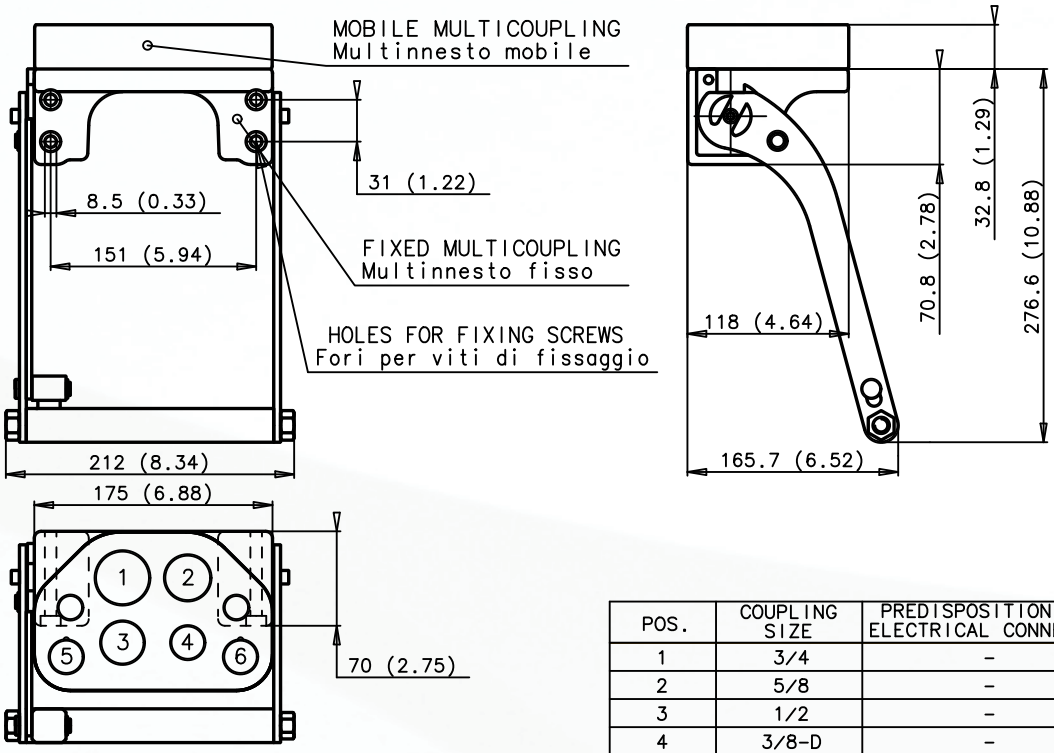

POS.	COUPLING SIZE	PREDISPOSITION FOR ELECTRICAL CONNECTOR
1	3/4	-
2	5/8	-
3	1/2	-
4	3/8-D	-
5	3/8-D	YES
6	3/8-D	YES

WEIGHT FIXED HALF = 5.8 Kg
WEIGHT MOBILE HALF = 2.8 Kg

CAP FOR MULTICOUPLING GRM6ZF
Tappo multinnesto fisso GRM6ZF

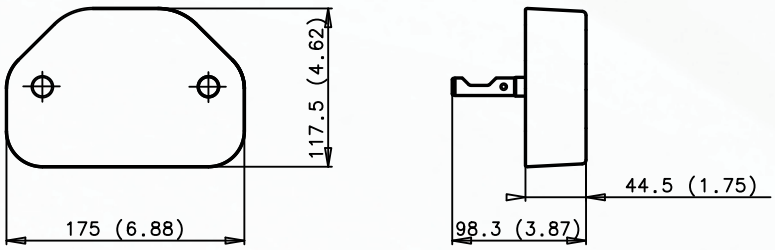

WEIGHT = 1.1 Kg

PARKING STATION GRM6ZF
Stazione di parcheggio GRM6ZF

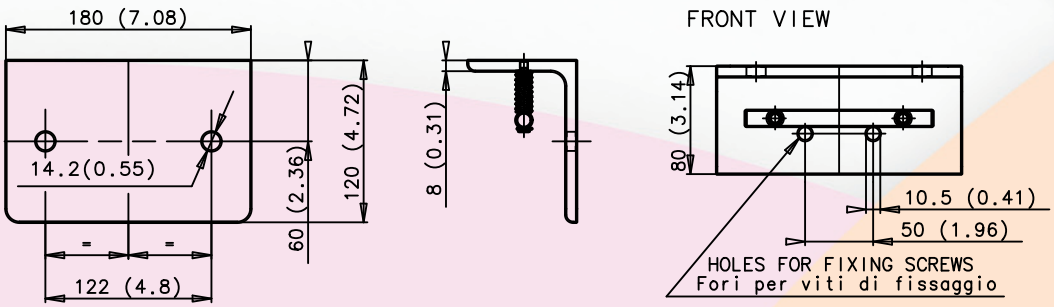

WEIGHT = 2.2 Kg

Dimensions in millimeters (Inch)

GR6AB MULTICOUPLING

Two lines size 3/4
- Four lines size 1/2
- On request lines predisposed for electrical connector

GR6AB	MAX. MULTICOUPLING RESISTANCE MAX. RESISTENZA MULTINNESTO	23000 N

FIXED AND MOBILE MULTICOUPLING
Multinnesto Fisso e Mobile

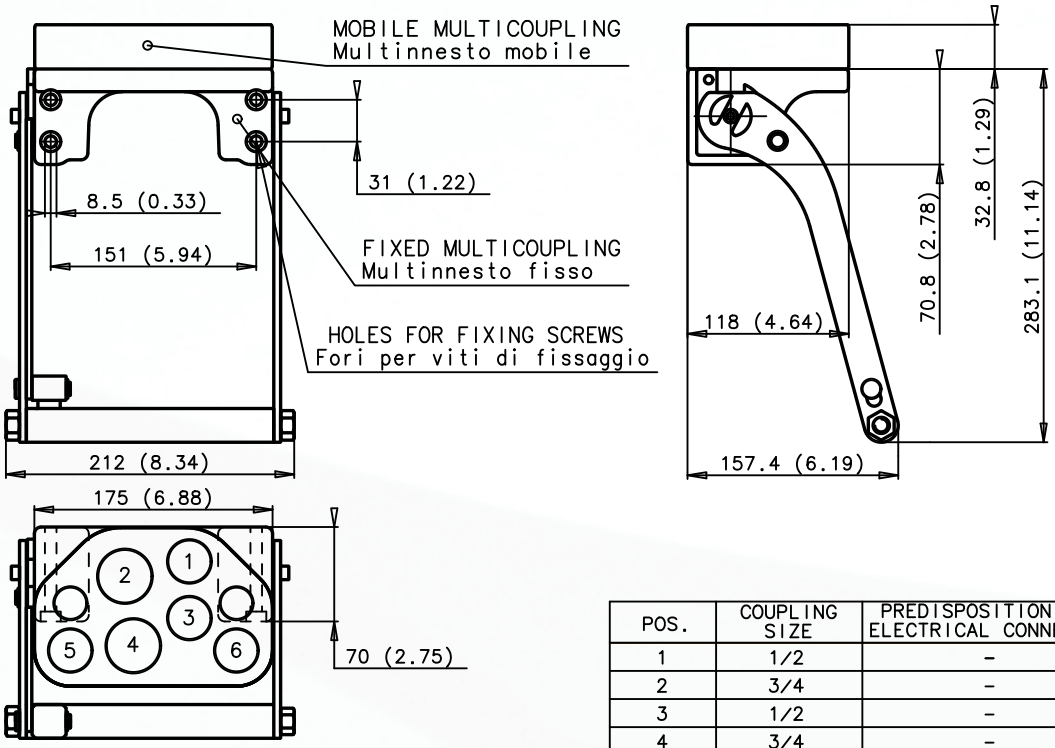

POS.	COUPLING SIZE	PREDISPOSITION FOR ELECTRICAL CONNECTOR
1	1/2	-
2	3/4	-
3	1/2	-
4	3/4	-
5	1/2	-
6	1/2	-

WEIGHT FIXED HALF = 5.4 Kg
WEIGHT MOBILE HALF = 2.6 Kg

CAP FOR MULTICOUPLING GR6AB
Tappo multinnesto fisso GR6AB

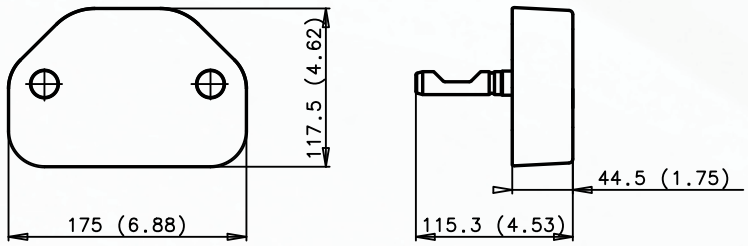

WEIGHT = 1.2 Kg

PARKING STATION GRU6
Stazione di parcheggio GRU6

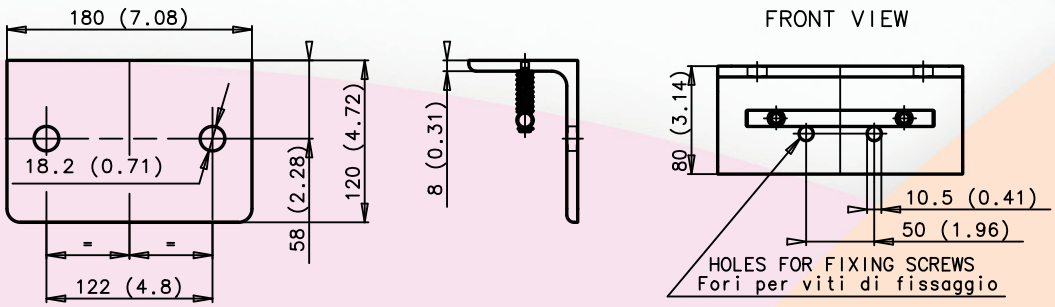

WEIGHT = 2.4 Kg

Dimensions in millimeters (Inch)

GRP6 MULTICOUPLING

- Two lines size 3/4
- One line size 5/8
- One line size 1/2
- One line size 3/8
- One line size 1/4
- One line predisposed for electrical connector Female EC.., Male EC..D

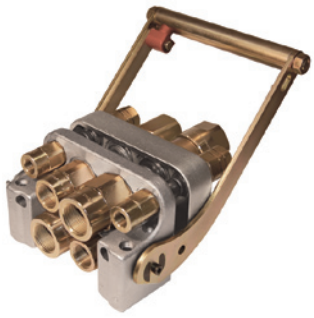

GRP6	MAX. MULTICOUPLING RESISTANCE MAX. RESISTENZA MULTINNESTO	23000 N

FIXED AND MOBILE MULTICOUPLING
Multinnesto Fisso e Mobile

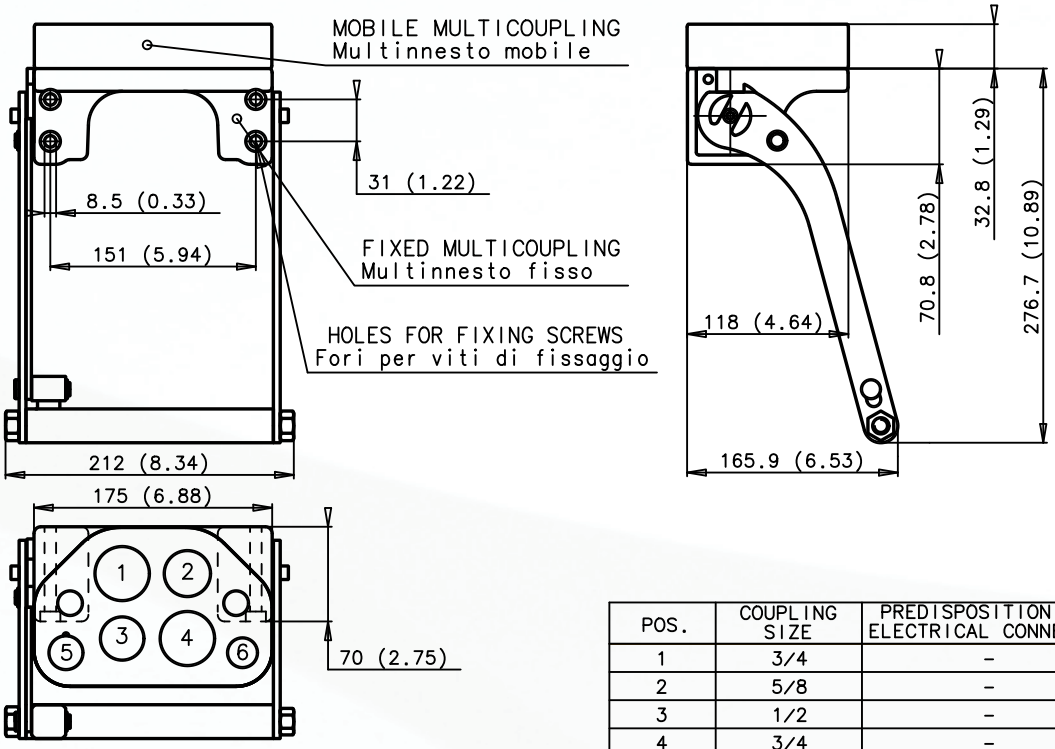

POS.	COUPLING SIZE	PREDISPOSITION FOR ELECTRICAL CONNECTOR
1	3/4	-
2	5/8	-
3	1/2	-
4	3/4	-
5	3/8-D	YES
6	1/4	-

WEIGHT FIXED HALF = 5.7 Kg
WEIGHT MOBILE HALF = 2.6 Kg

CAP FOR MULTICOUPLING GRP6
Tappo multinnesto fisso GRP6

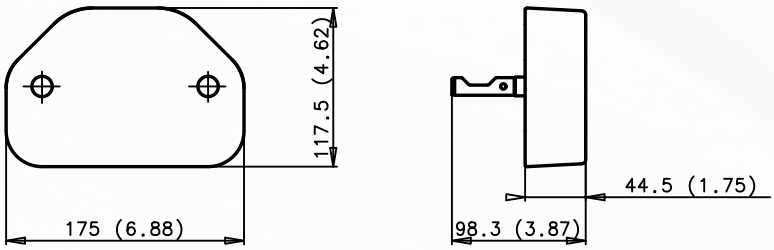

WEIGHT = 1.1 Kg

PARKING STATION GRM6ZF
Stazione di parcheggio GRM6ZF

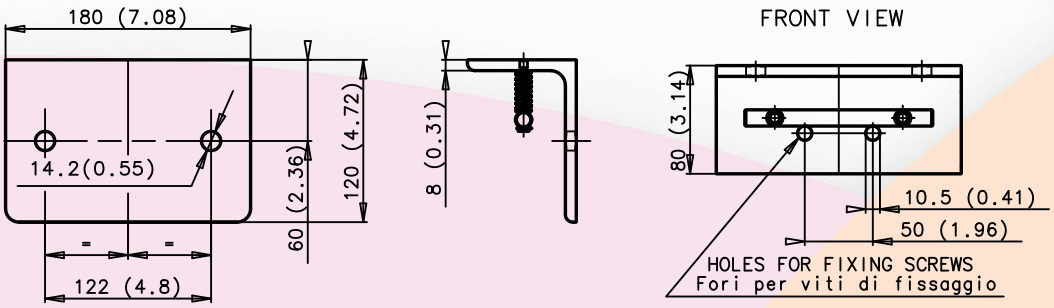

WEIGHT = 2.2 Kg

Dimensions in millimeters (Inch)

GRM6 MULTICOUPLING

- Two lines size 3/4
- Two lines size 5/8
- Two lines size 3/8
- Two lines predisposed for electrical connector Female EC.., Male EC..D

GRM6	MAX. MULTICOUPLING RESISTANCE MAX. RESISTENZA MULTINNESTO	23000 N

FIXED AND MOBILE MULTICOUPLING
Multinnesto Fisso e Mobile

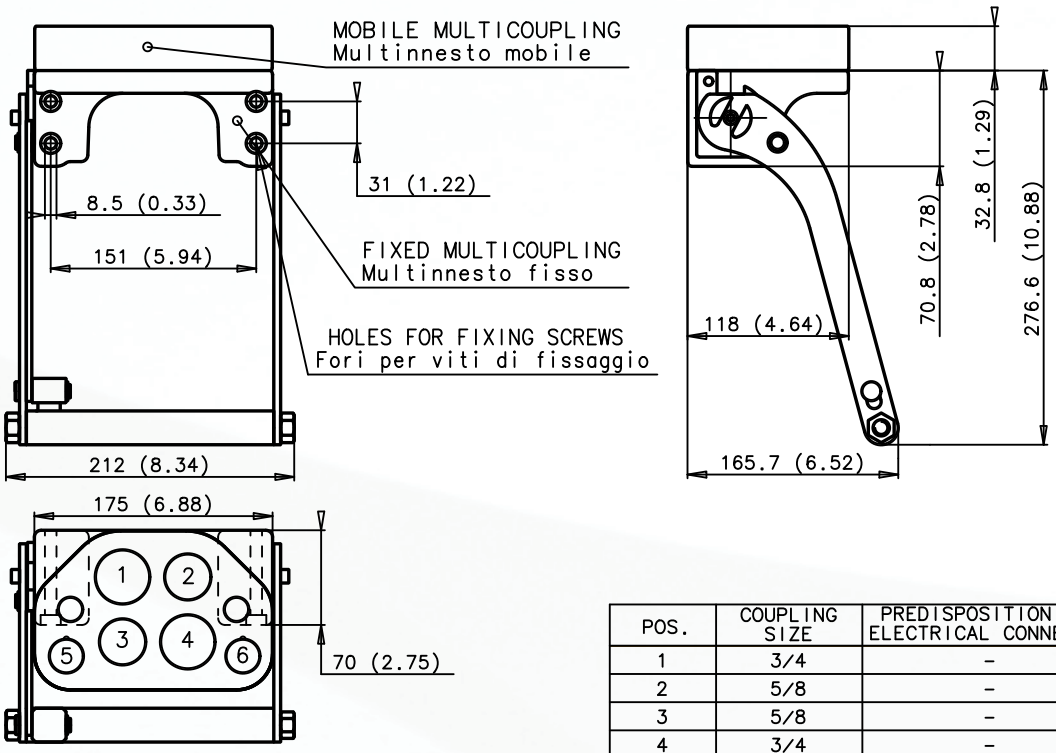

POS.	COUPLING SIZE	PREDISPOSITION FOR ELECTRICAL CONNECTOR
1	3/4	-
2	5/8	-
3	5/8	-
4	3/4	-
5	3/8-D	YES
6	3/8-D	YES

WEIGHT FIXED HALF = 5.7 Kg
WEIGHT MOBILE HALF = 2.6 Kg

CAP FOR MULTICOUPLING GRM6
Tappo multinnesto fisso GRM6

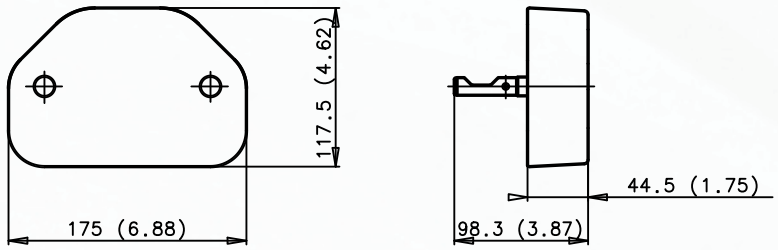

WEIGHT = 1.1 Kg

PARKING STATION GRM6ZF
Stazione di parcheggio GRM6ZF

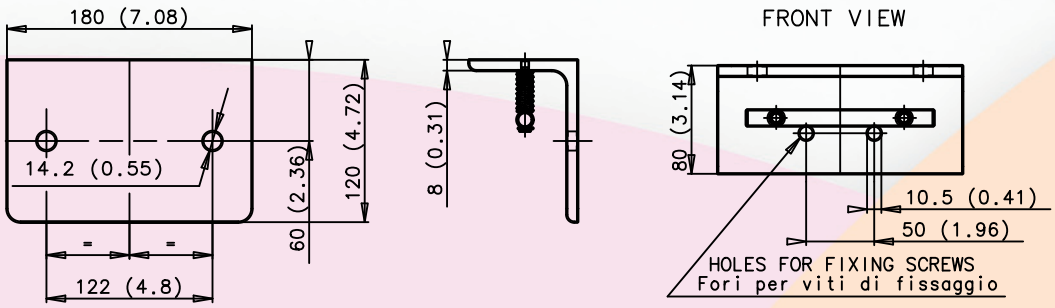

WEIGHT = 2.2 Kg

Dimensions in millimeters (Inch)

GR6LL MULTICOUPLING

- Four lines size 3/4
- Two lines size 1/2
- Two lines predisposed for electrical connector Female EC..-13, Male EC..-13

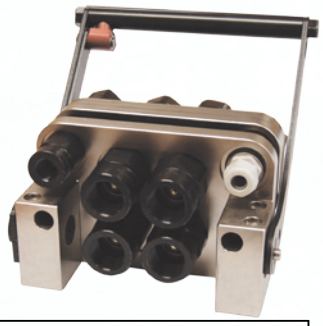

GR6LL	MAX. MULTICOUPLING RESISTANCE MAX. RESISTENZA MULTINNESTO	23000 N

FIXED AND MOBILE MULTICOUPLING
Multinnesto Fisso e Mobile

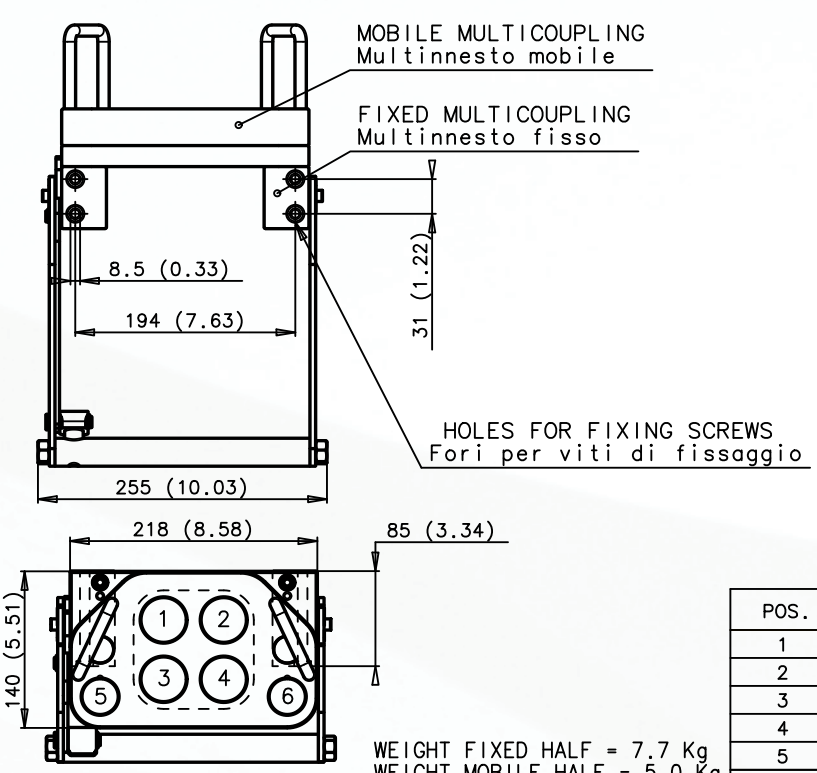

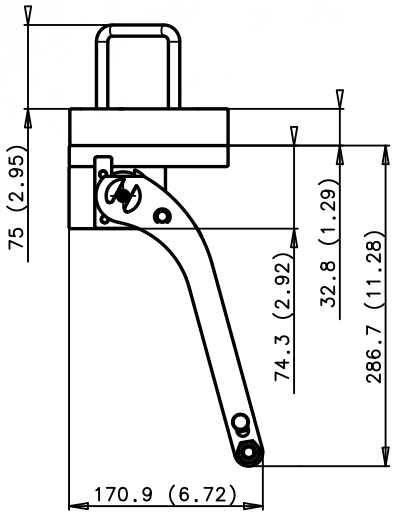

POS.	COUPLING SIZE	PREDISPOSITION FOR ELECTRICAL CONNECTOR
1	3/4	-
2	3/4	-
3	3/4	-
4	3/4	-
5	1/2	YES
6	1/2	YES

WEIGHT FIXED HALF = 7.7 Kg
WEIGHT MOBILE HALF = 5.0 Kg

CAP FOR MULTICOUPLING GR6LL
Tappo multinnesto fisso GR6LL

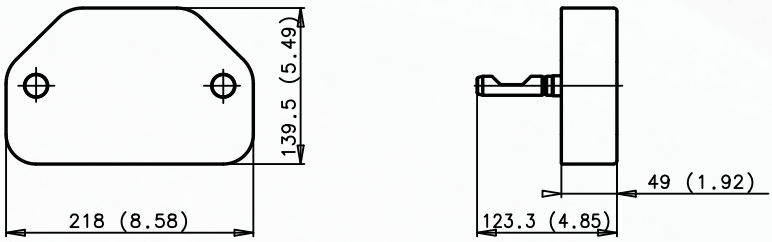

WEIGHT = 1.7 Kg

PARKING STATION GR6LL
Stazione di parcheggio GR6LL

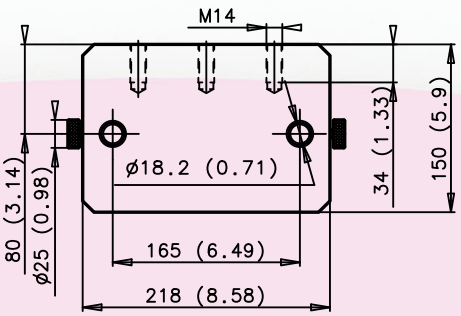

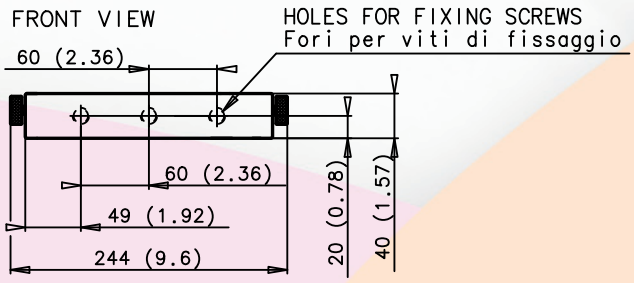

WEIGHT = 3.400 Kg

Dimensions in millimeters (Inch)

GRU6 MULTICOUPLING

- One line size 1
- One line size 3/4
- Two lines size 1/2
- Two lines size 3/8
- One line predisposed for electrical connector Female EC.., Male EC..D
- On request others lines predisposed for electrical connector

GRU6	MAX. MULTICOUPLING RESISTANCE MAX. RESISTENZA MULTINNESTO	23000 N

FIXED AND MOBILE MULTICOUPLING
Multinnesto Fisso e Mobile

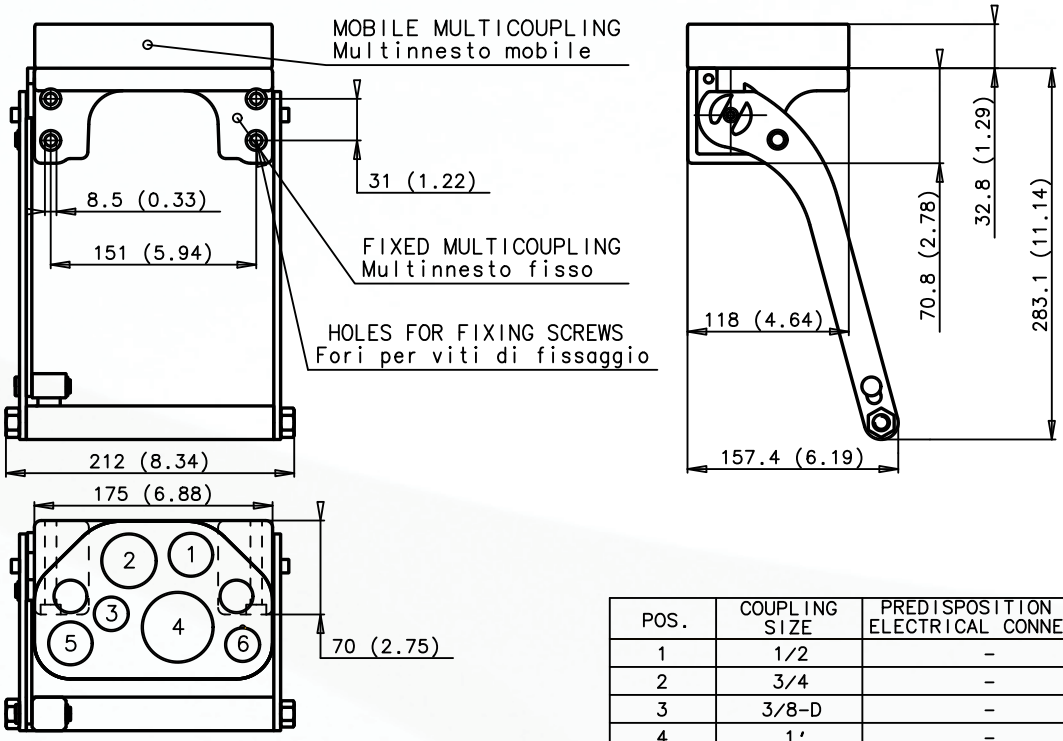

POS.	COUPLING SIZE	PREDISPOSITION FOR ELECTRICAL CONNECTOR
1	1/2	-
2	3/4	-
3	3/8-D	-
4	1'	-
5	1/2	-
6	3/8-D	YES

WEIGHT FIXED HALF = 5.4 Kg
WEIGHT MOBILE HALF = 2.6 Kg

CAP FOR MULTICOUPLING GRU6
Tappo multinnesto fisso GRU6

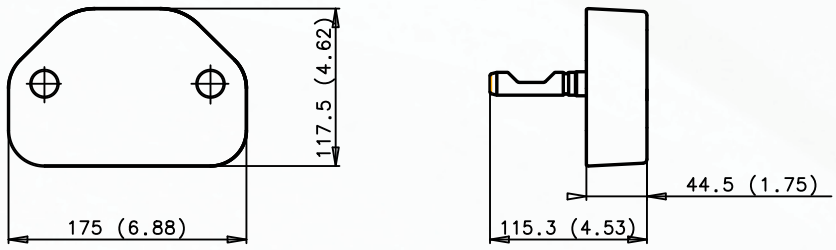

WEIGHT = 1.2 Kg

PARKING STATION GRU6
Stazione di parcheggio GRU6

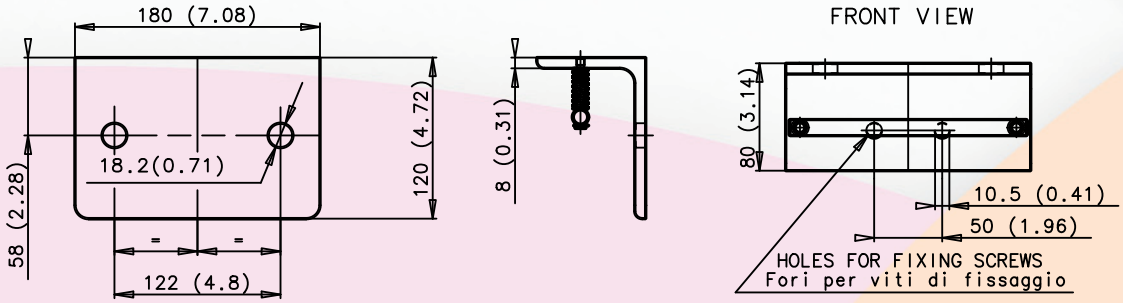

WEIGHT = 2.4 Kg

Dimensions in millimeters (Inch)

GR10-9 MULTICOUPLING

- Ten lines size 3/8
- Two lines predisposed for electrical connector Female EC.., Male EC..D
- On request others lines predisposed for electrical connector

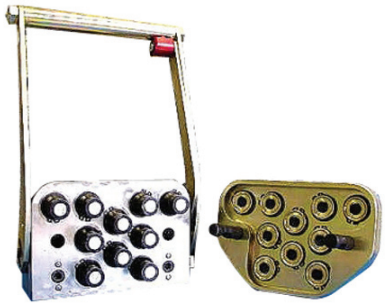

GR10-9

MAX. MULTICOUPLING RESISTANCE
MAX. RESISTENZA MULTINNESTO 23000 N

FIXED AND MOBILE MULTICOUPLING
Multinnesto Fisso e Mobile

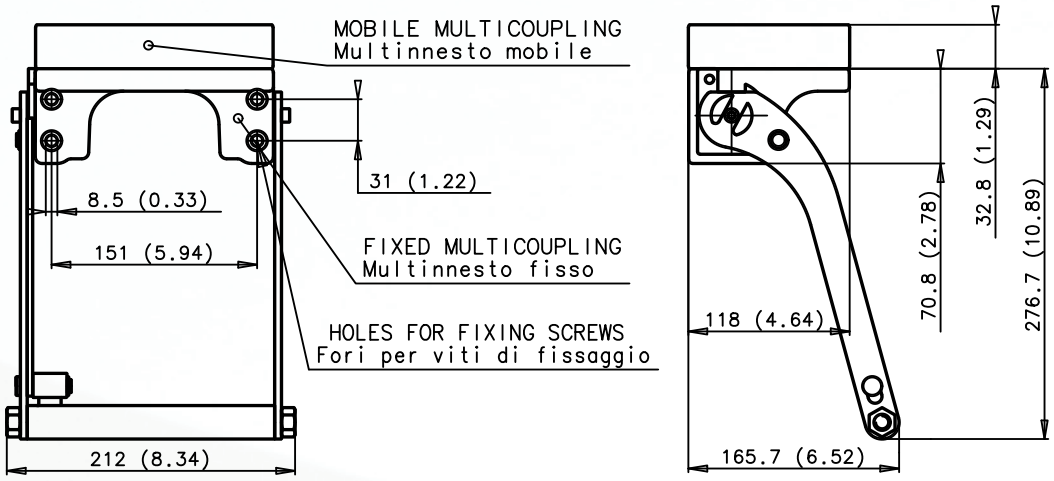

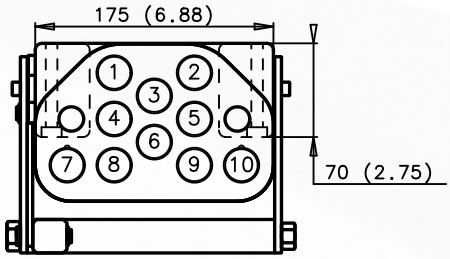

POS.	COUPLING SIZE	PREDISPOSITION FOR ELECTRICAL CONNECTOR
1	3/8-D	-
2	3/8-D	-
3	3/8-D	-
4	3/8-D	-
5	3/8-D	-
6	3/8-D	-
7	3/8-D	YES
8	3/8-D	-
9	3/8-D	-
10	3/8-D	YES

WEIGHT FIXED HALF = 5.7 Kg
WEIGHT MOBILE HALF = 2.7 Kg

CAP FOR MULTICOUPLING GR10-9
Tappo multinnesto fisso GR10-9

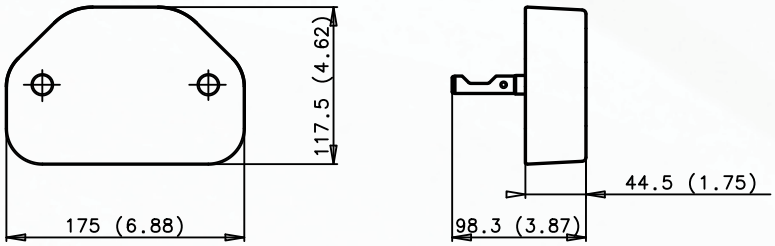

WEIGHT = 1.1 Kg

PARKING STATION GRM6ZF
Stazione di parcheggio GRM6ZF

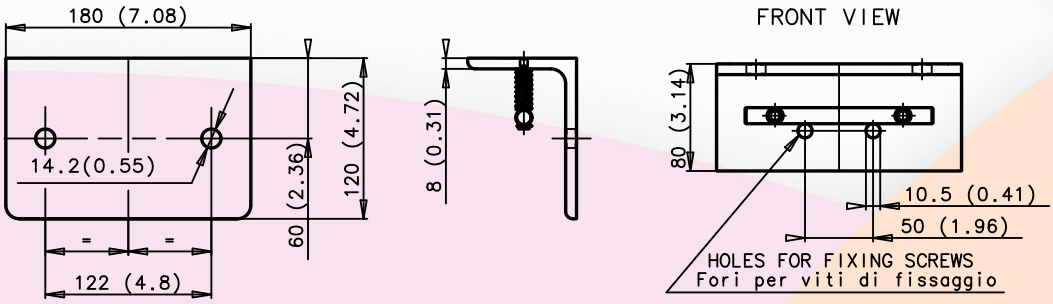

WEIGHT = 2.2 Kg

Dimensions in millimeters (Inch)

GR10-13 MULTICOUPLING

- Ten lines size 1/2
- Two lines predisposed for electrical connector Female EC..-13, Male EC..-13
- On request others lines predisposed for electrical connector

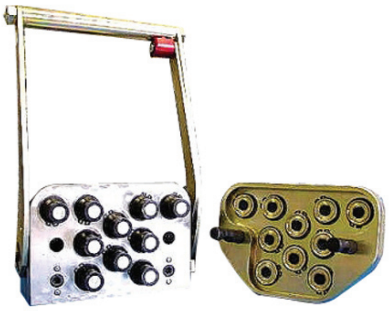

GR10-13

MAX. MULTICOUPLING RESISTANCE
MAX. RESISTENZA MULTINNESTO 23000 N

FIXED AND MOBILE MULTICOUPLING
Multinnesto Fisso e Mobile

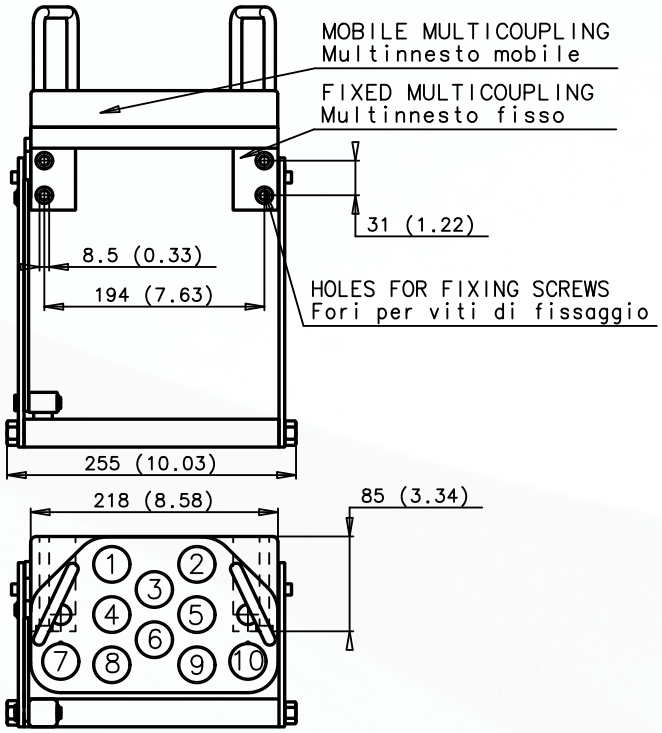

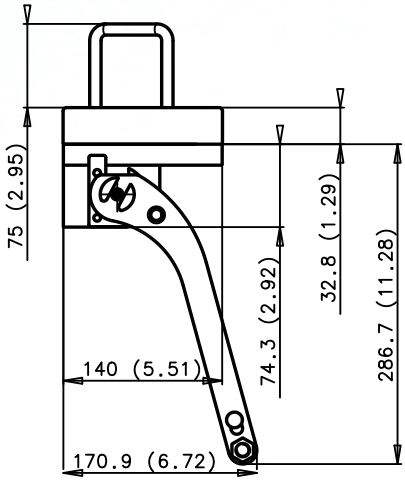

POS.	COUPLING SIZE	PREDISPOSITION FOR ELECTRICAL CONNECTOR
1	1/2	-
2	1/2	-
3	1/2	-
4	1/2	-
5	1/2	-
6	1/2	-
7	1/2	YES
8	1/2	-
9	1/2	-
10	1/2	YES

WEIGHT FIXED HALF = 7.5 Kg
WEIGHT MOBILE HALF = 4.3 Kg

CAP FOR MULTICOUPLING GR10-13
Tappo multinnesto fisso GR10-13

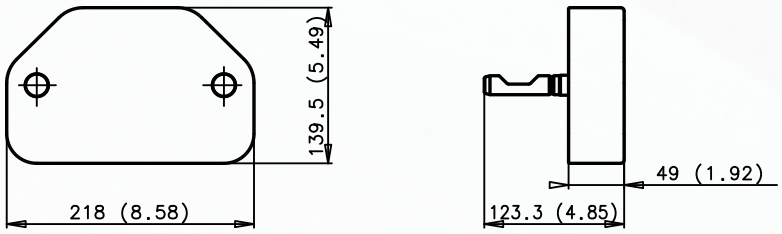

WEIGHT = 1.8 Kg

PARKING STATION GR6LL
Stazione di parcheggio GR6LL

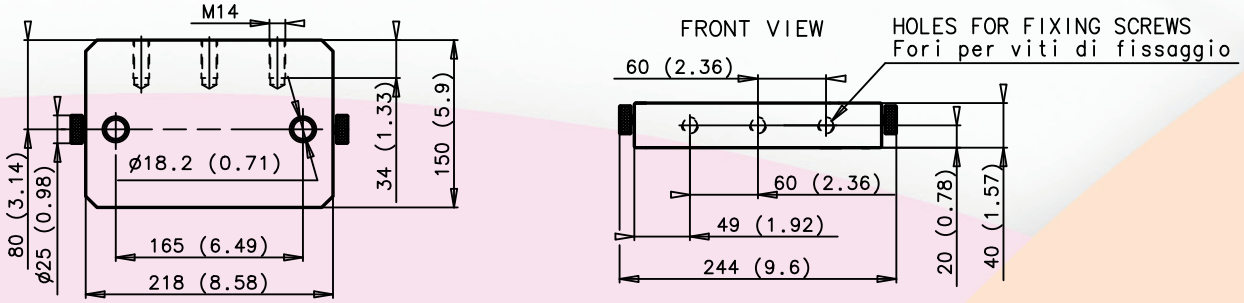

WEIGHT = 3.400 Kg | Dimensions in millimeters (Inch)

SERIES: **DP MULTICOUPLINGS**

INTERCHANGE: Stucchi internal specification

MAIN APPLICATIONS

- Agricultural equipment
- Mobile construction equipment
- Vehicles
- Industrial equipment

"DP" is the compact manual multicouplings series that offer s olutions for applications requiring connection and disconnection of several hydraulic, electrical and pneumatic lines in reduced spaces. Up to four lines size 1/2 can be simultaneously connected and disconnected by a safe, simple and quick movement requiring low effort. The lines can all have the same size or each line can be different from the others according to the application.

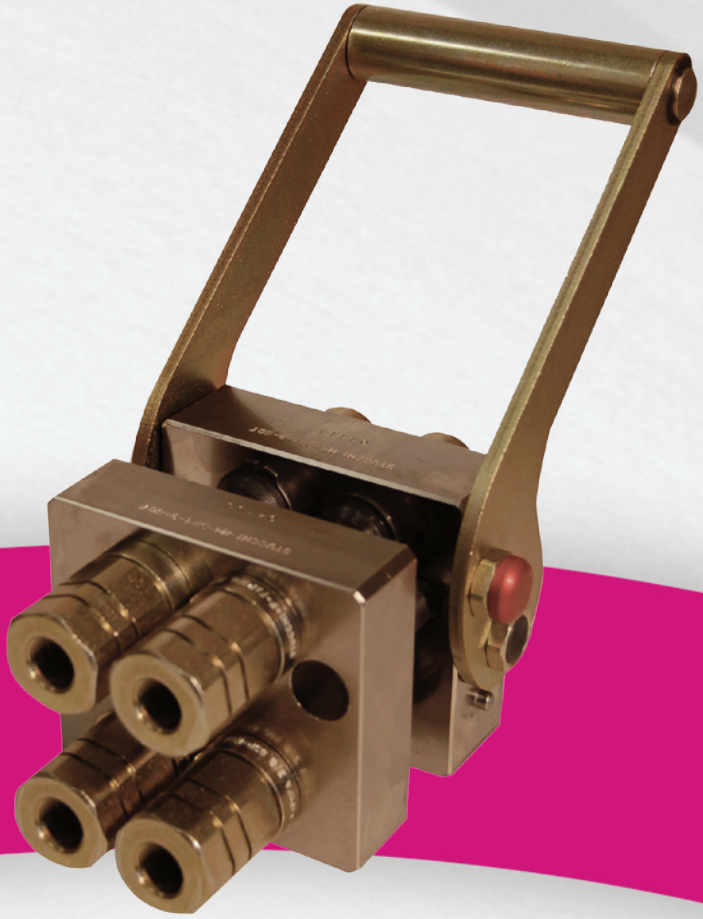

Stucchi®
A CONSTANT FLOW OF SOLUTIONS

TECHNICAL FEATURES AND OPTIONS

- Interchangeability: Stucchi internal specification
- Mechanical connection: Internal cams and locking pins
- Connection system: Rotating the lever
- Disconnection system: Rotating the lever
- Construction material and surface treatment: Body plates in aluminum alloy nickel plated. Cams and pins in high resistance carbon steel with nitriding + oxidation (QPQ) treatment. Others components in carbon steel with zinc plating or iron zinc (black) treatment.

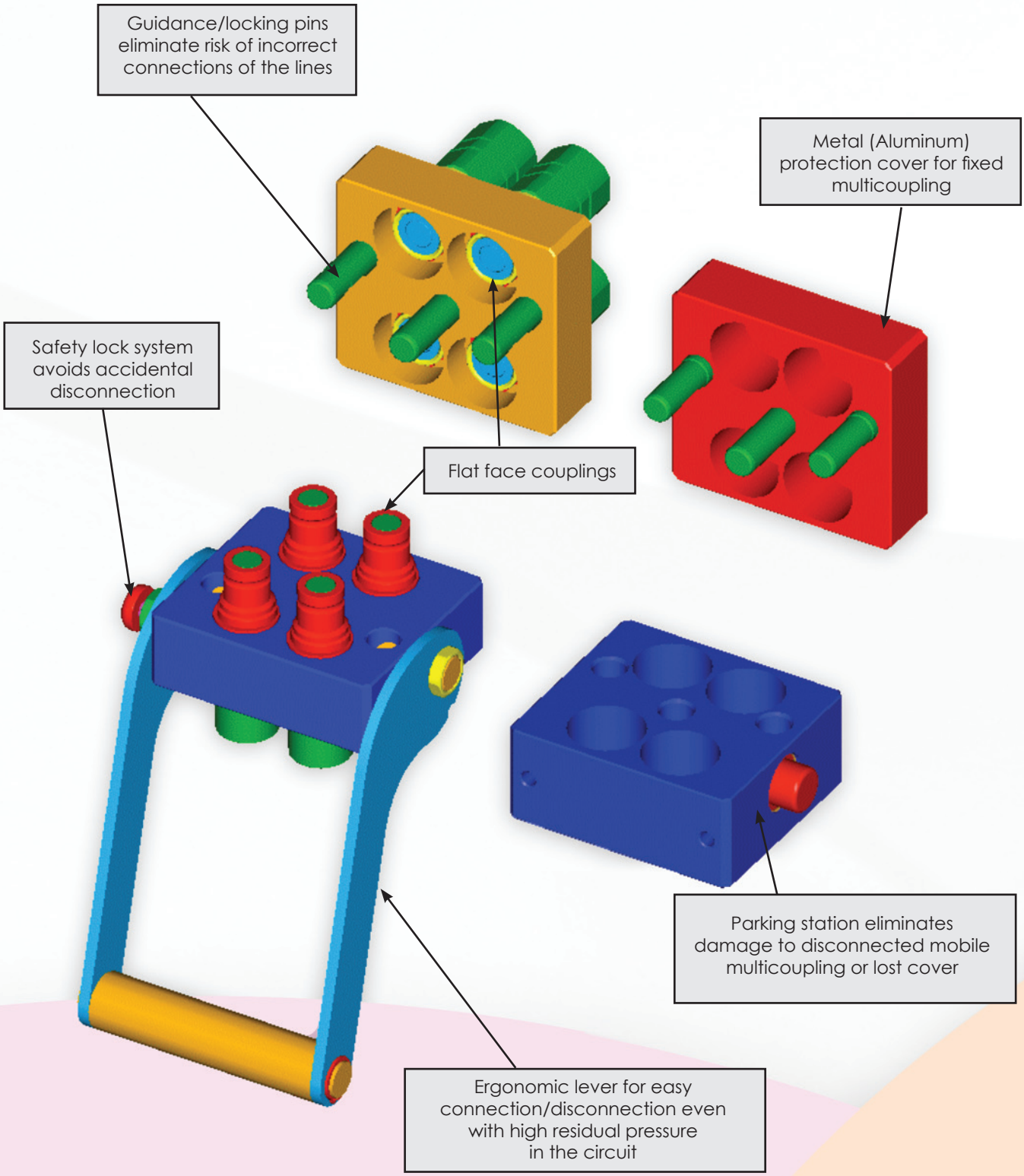

BENEFITS

- Quick connection and disconnection of up to four hydraulic, electrical and pneumatic lines without any risk to incorrect connection of the lines.
- Flat face couplings: Easy to clean avoiding contamination of circuit. No fluid loss to the environment.
- Couplings mounted on the plates with threaded sleeves or seeger/snap rings for easy installation or replacement.
- Using FAP couplings with triple valve system, it is possible connect and disconnect with high residual pressure in the circuit.
- Singles female couplings can be connected manually to the male couplings on the fixed half. This can be very useful for the connection of auxiliary lines that are not fitted in the mobile half.
- Possibility to fit electrical connector for electronic control system on the equipment.
- Mechanical connection by internal cams and locking pins eliminates brinelling effect on the couplings.
- Compact design.
- Easy to install also on pre-existent system. Safe and simple to use.

HOW TO USE

INSTALLATION:

- Fix the fixed multicoupling on the machine using fixing screws as indicated in the drawing here below.
- After having assembled the couplings on the hoses, place them in the holes of the multicouplings and lock them using proper threaded sleeve and/or seeger/snap rings.

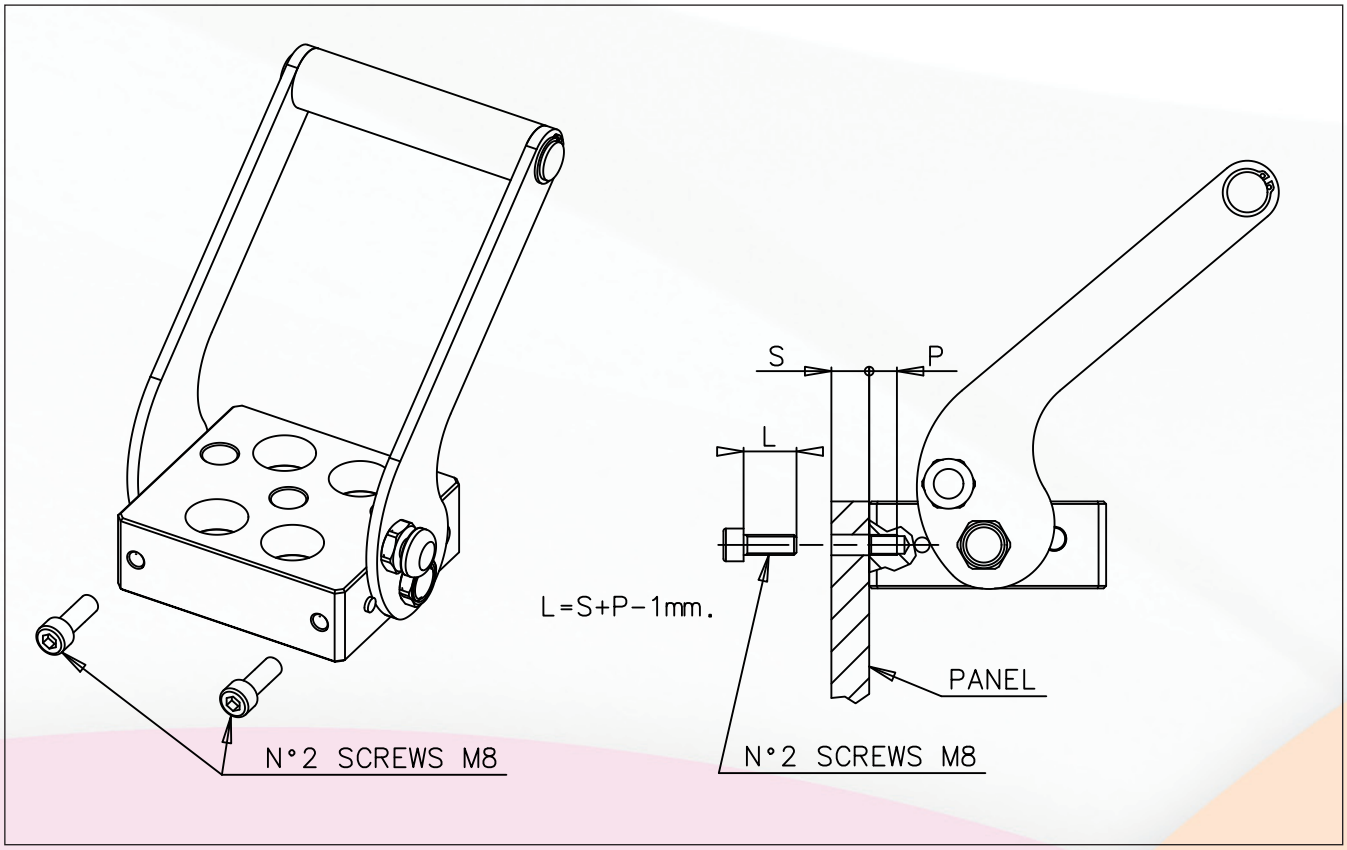

TO CONNECT:

- Before to couple clean the flat mating surface of the couplings to avoid the inclusion of dirty in the circuit.
- Insert the guidance pins of the mobile multicoupling in the holes of the fixed multicoupling and move the mobile half till the contact of the couplings faces (fig. 1).
- Acting on the handle turn the lever in the direction of the fixed multicoupling (fig. 2).
- Continue to rotate till the safety lock automatically engage itself (fig. 3).
- Now the multicoupling is coupled and ready to work.
- In case of connection with residual pressure in the circuit, the maximum force is required only for the last third of the connection.

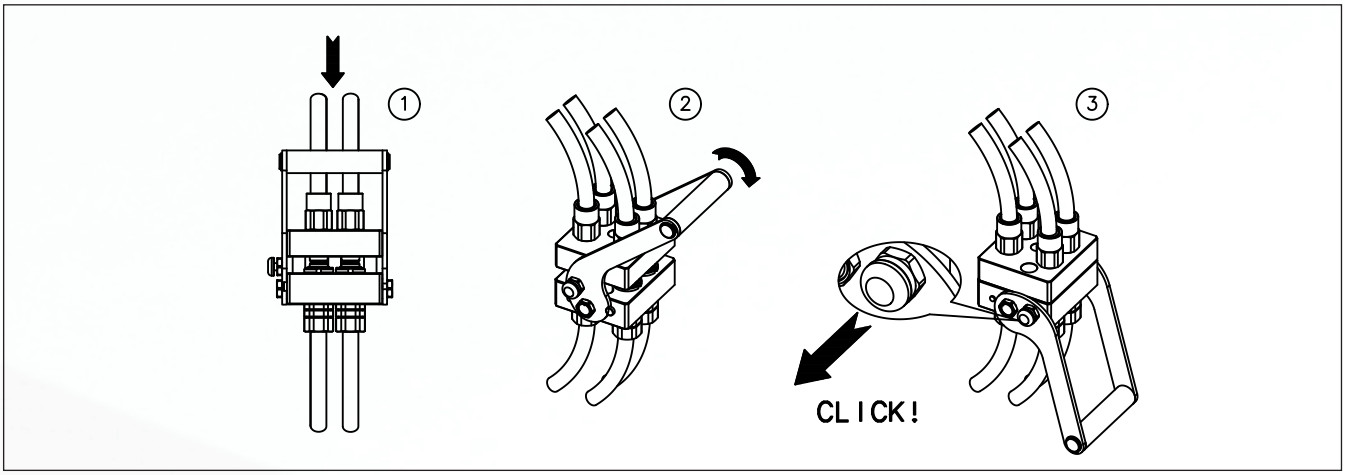

TO DISCONNECT:

- Push the red safety button, at the same time acting on the handle turn the lever in the direction of the mobile multicoupling (fig. 4).
- Continue to rotate till the mechanical stop of the levers (fig. 5)
- Now the multicoupling is uncoupled and it is possible to pull out the mobile half (fig. 6).
- When the fixed multicoupling is mounted upside down, the mobile multicoupling must be supported in order to avoid it fall down causing damage.
- In case of disconnection with residual pressure in the circuit, the maximum force is required only for the first third of the disconnection.

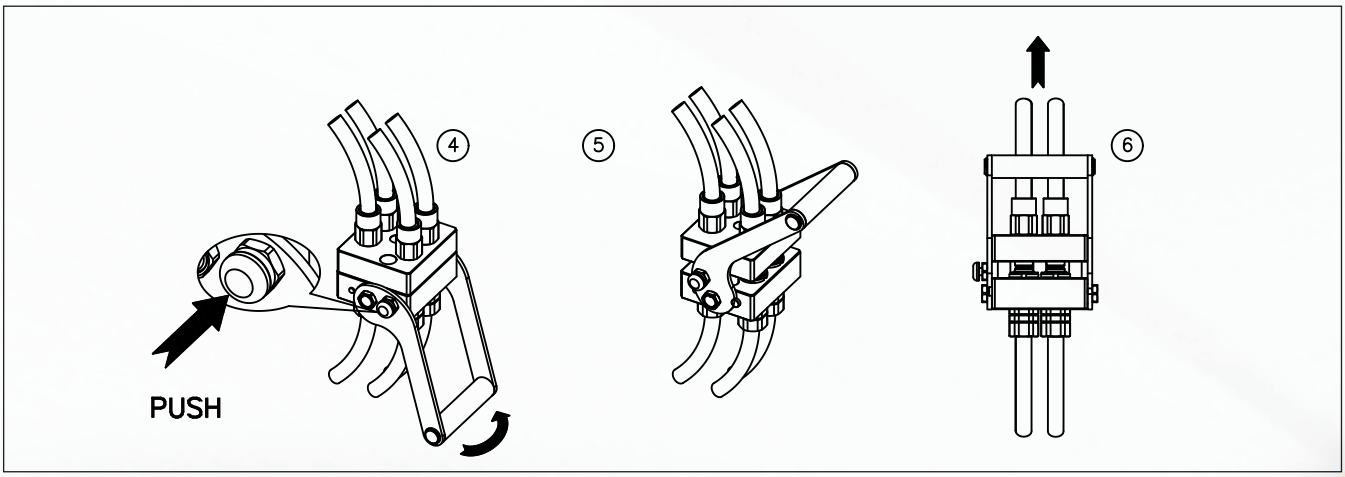

WARNING!

- Do not force the lever without pushing the red safety button.
- Do not use extensions or other tools to ease the rotating of the lever.
- Do not connect the fixed half with the mobile half if dirt or other material is between them.
- When the multicoupling is disconnected, it is suggested to use the protection cover for the fixed half and the parking station for the mobile half.

PERFORMANCE

All the Stucchi multicouplings have been tested at their maximum resistance by impulse pressure test.
The maximum resistance (N) for each multicoupling model, is indicated in the data sheets below.

The force applied to multicoupling coupled, depends on the number of couplings under pressure at the same time, on their operating pressure and on their size.
For a correct use of the multicoupling is necessary to verify that the force is not greater to the maximum resistance of the multicoupling.
F= [(P3/8x S3/8) + (P1/2x S1/2)] x 9.8
F = Force applied to multicoupling (N)
P = Total amount of operating pressure coupled in the couplings with same size (bar)
S = Hydrostatic pushing area coupled (cm2)
The operating pressure for a single coupling must not be greater to the maximum operating pressure coupled indicated in table.

Coupling size	Hydrostatic pushing area coupled	Maximum operating pressure coupled for FAP couplings
3/8	S3/8= 1,226 cm2	35 Mpa (350 bar)
1/2	S1/2= 1,893 cm2	33 Mpa (330 bar)

EXAMPLE:

Max. resistance of DPT2 multicoupling is 10000 N.
To verify if DPT2 multicoupling resists to operating condition of following application:

One line size 3/8 with max. operating pressure coupled of 30 Mpa (300 bar)
One line size 1/2 with max. operating pressure coupled of 20 Mpa (200 bar)

It is necessary verify that F (force applied to multicoupling) is not greater than max. multicoupling resistance:

P3/8 = 300 bar
P1/2 = 200 bar

F= [(P3/8x S3/8) + (P1/2x S1/2)] x 9.8 =
F= [(300x1,226) + (200x1,893)] x 9.8 =
F= [367,8 + 378,6] x 9.8 = 7314 N

Being F (7314 N) lower than max. multicoupling resistance (10000 N),
the DPT2 multicoupling is suitable for this application.

DP2-9 MULTICOUPLING

- Two lines size 3/8
- On request one line predisposed for electrical connector

DP2-9	MAX. MULTICOUPLING RESISTANCE MAX. RESISTENZA MULTINNESTO	8000 N

FIXED AND MOBILE MULTICOUPLING
Multinnesto Fisso e Mobile

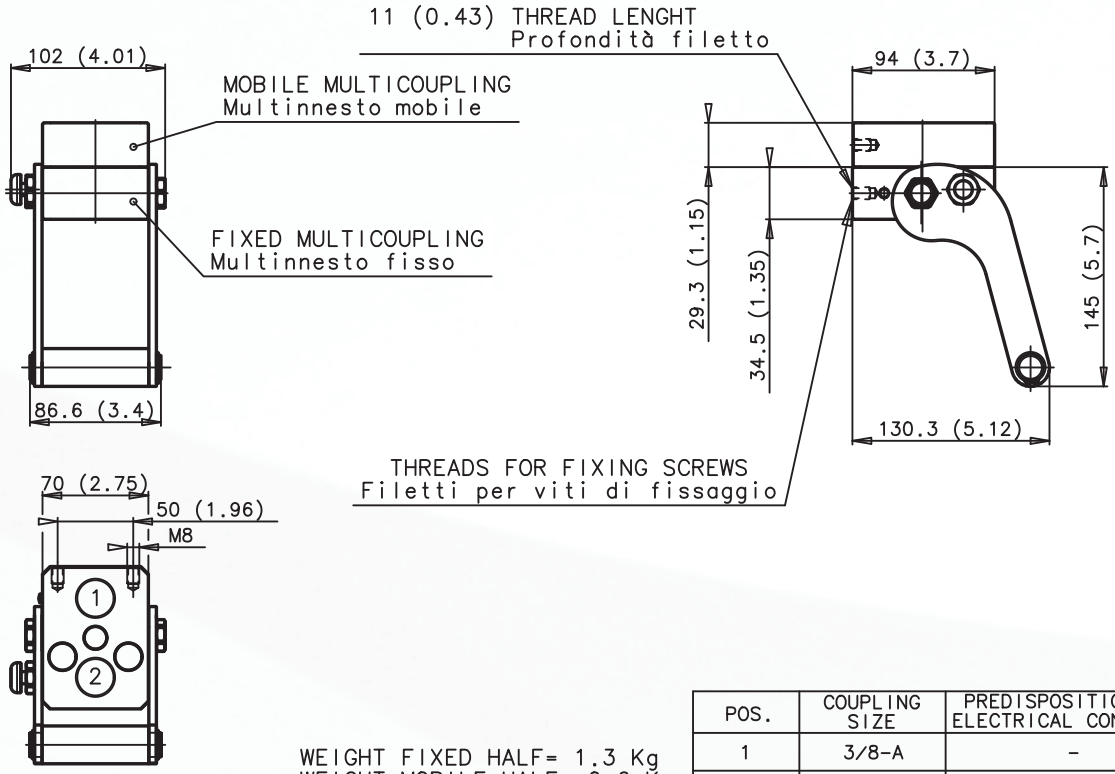

POS.	COUPLING SIZE	PREDISPOSITION FOR ELECTRICAL CONNECTOR
1	3/8-A	-
2	3/8-A	-

WEIGHT FIXED HALF= 1.3 Kg
WEIGHT MOBILE HALF= 0.6 Kg

CAP FOR MULTICOUPLING DP2-9
Tappo multinnesto fisso DP2-9

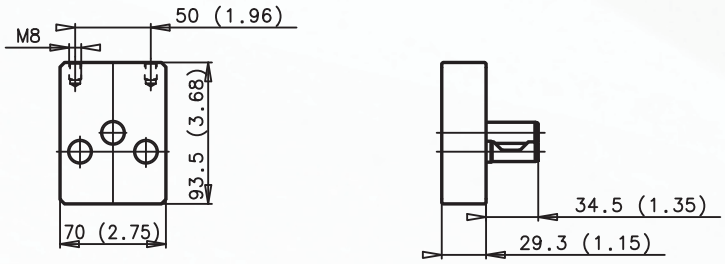

WEIGHT= 0.5 Kg

PARKING STATION DP2-9
Stazione di parcheggio DP2-9

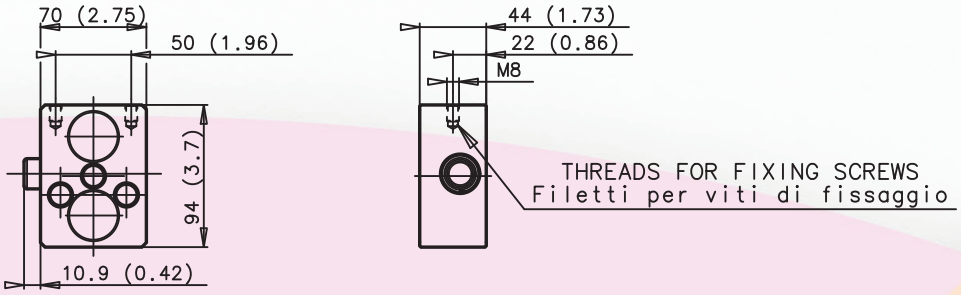

WEIGHT= 0.6 Kg

Dimensions in millimeters (Inch)

DPT2 MULTICOUPLING

- One line size 1/2
- One line size 3/8
- On request one line predisposed for electrical connector

DPT2	MAX. MULTICOUPLING RESISTANCE MAX. RESISTENZA MULTINNESTO	10000 N

FIXED AND MOBILE MULTICOUPLING
Multinnesto Fisso e Mobile

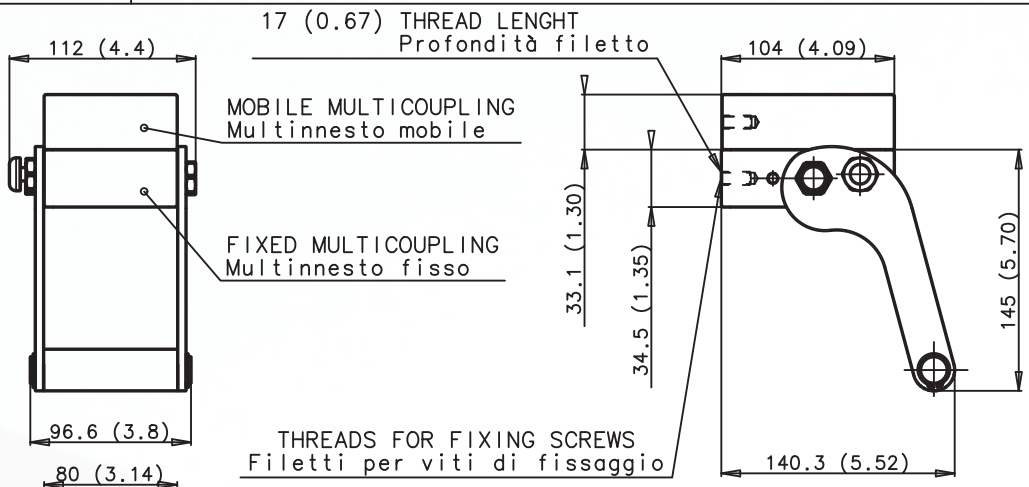

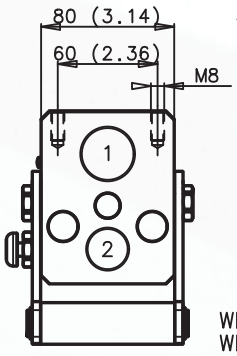

WEIGHT FIXED HALF= 1.5 Kg
WEIGHT MOBILE HALF= 0.8 Kg

POS.	COUPLING SIZE	PREDISPOSITION FOR ELECTRICAL CONNECTOR
1	1/2	-
2	3/8-D	-

CAP FOR MULTICOUPLING DPT2
Tappo multinnesto fisso DPT2

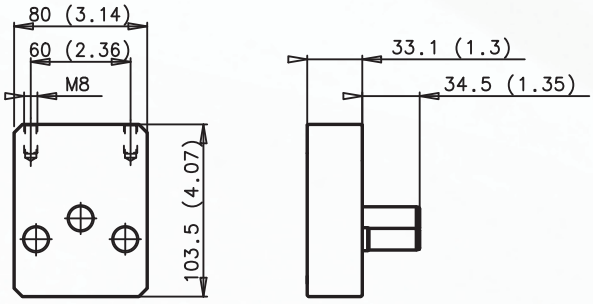

WEIGHT= 0.8 Kg

PARKING STATION DPT2
Stazione di parcheggio DPT2

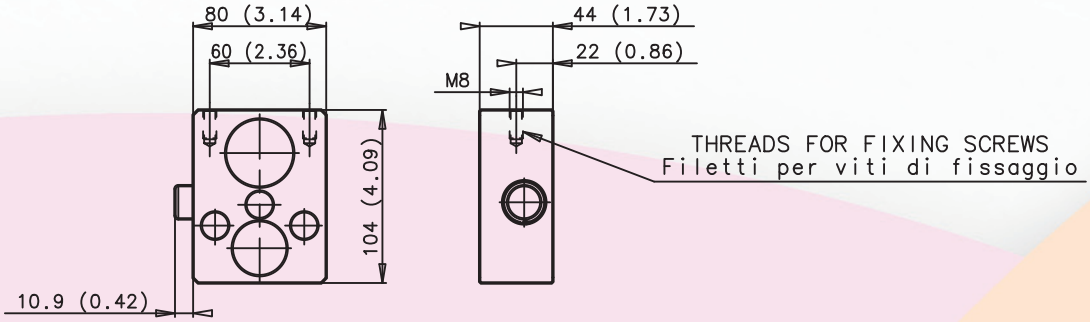

WEIGHT= 0.8 Kg

Dimensions in millimeters (Inch)

DP2-13 MULTICOUPLING

- Two lines size 1/2
- On request one line predisposed for electrical connector

DP2-13	MAX. MULTICOUPLING RESISTANCE MAX. RESISTENZA MULTINNESTO	12000 N

FIXED AND MOBILE MULTICOUPLING
Multinnesto Fisso e Mobile

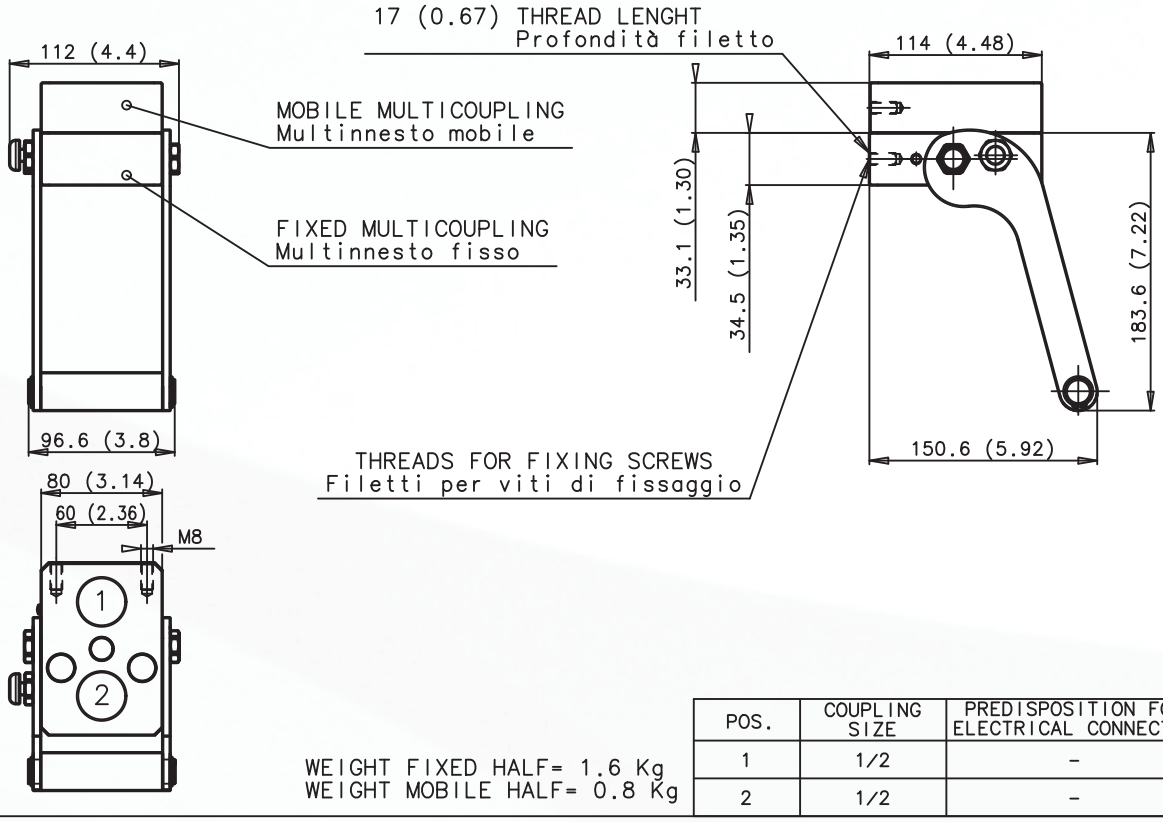

POS.	COUPLING SIZE	PREDISPOSITION FOR ELECTRICAL CONNECTOR
1	1/2	-
2	1/2	-

WEIGHT FIXED HALF= 1.6 Kg
WEIGHT MOBILE HALF= 0.8 Kg

CAP FOR MULTICOUPLING DP2-13
Tappo multinnesto fisso DP2-13

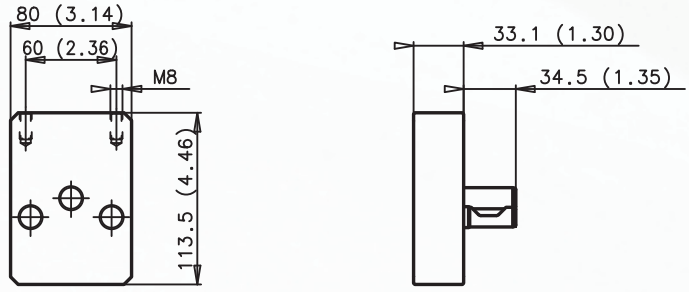

WEIGHT= 0.8 Kg

PARKING STATION DP2-13
Stazione di parcheggio DP2-13

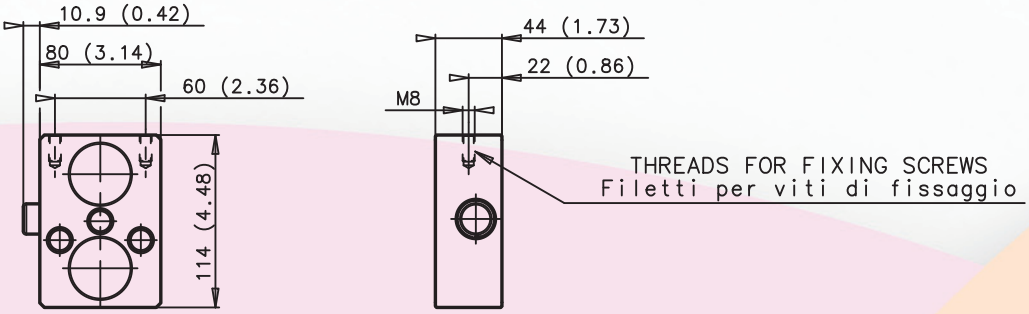

WEIGHT= 0.8 Kg | Dimensions in millimeters (Inch)

DPJ3 MULTICOUPLING

- Two lines size 3/8
- One line for electrical connector
  Female EC.., Male EC..J

DPJ3	MAX. MULTICOUPLING RESISTANCE MAX. RESISTENZA MULTINNESTO	8000 N

FIXED AND MOBILE MULTICOUPLING
Multinnesto Fisso e Mobile

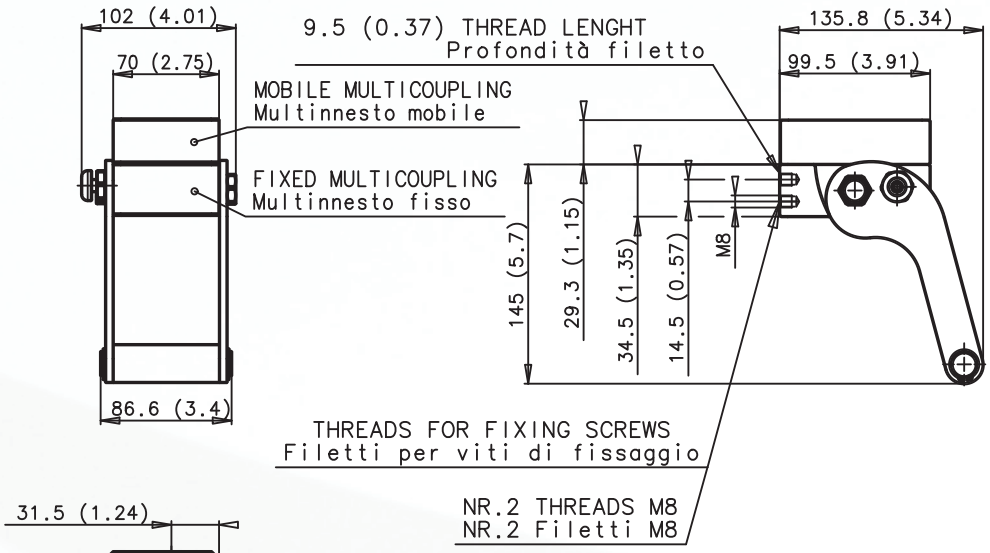

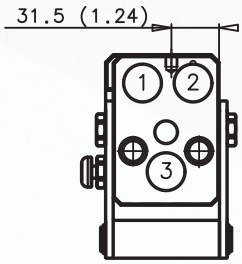

POS.	COUPLING SIZE	PREDISPOSITION FOR ELECTRICAL CONNECTOR
1	3/8-A	-
2	-	YES
3	3/8-A	-

WEIGHT FIXED HALF= 1.3 Kg
WEIGHT MOBILE HALF= 0.6 Kg

CAP FOR MULTICOUPLING DPJ3
Tappo multinnesto fisso DPJ3

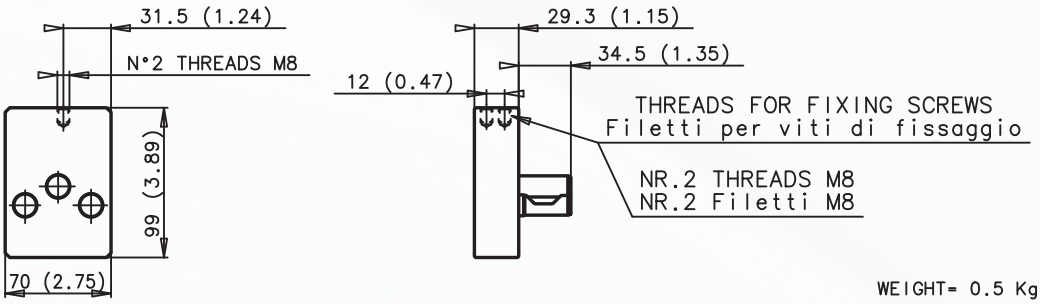

WEIGHT= 0.5 Kg

PARKING STATION DPJ3
Stazione di parcheggio DPJ3

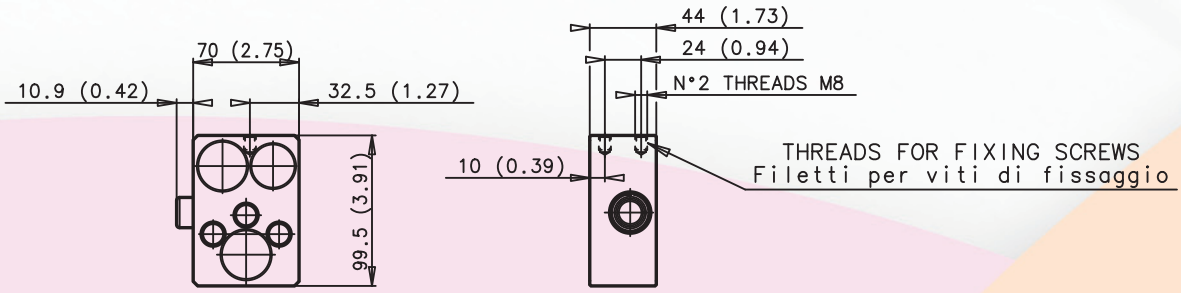

WEIGHT= 0.6 Kg

Dimensions in millimeters (Inch)

DPT3 MULTICOUPLING

- One line size 1/2
- One line size 3/8
- One line for electrical connector
  Female EC.., Male EC..DT

DPT3	MAX. MULTICOUPLING RESISTANCE MAX. RESISTENZA MULTINNESTO	10000 N

FIXED AND MOBILE MULTICOUPLING
Multinnesto Fisso e Mobile

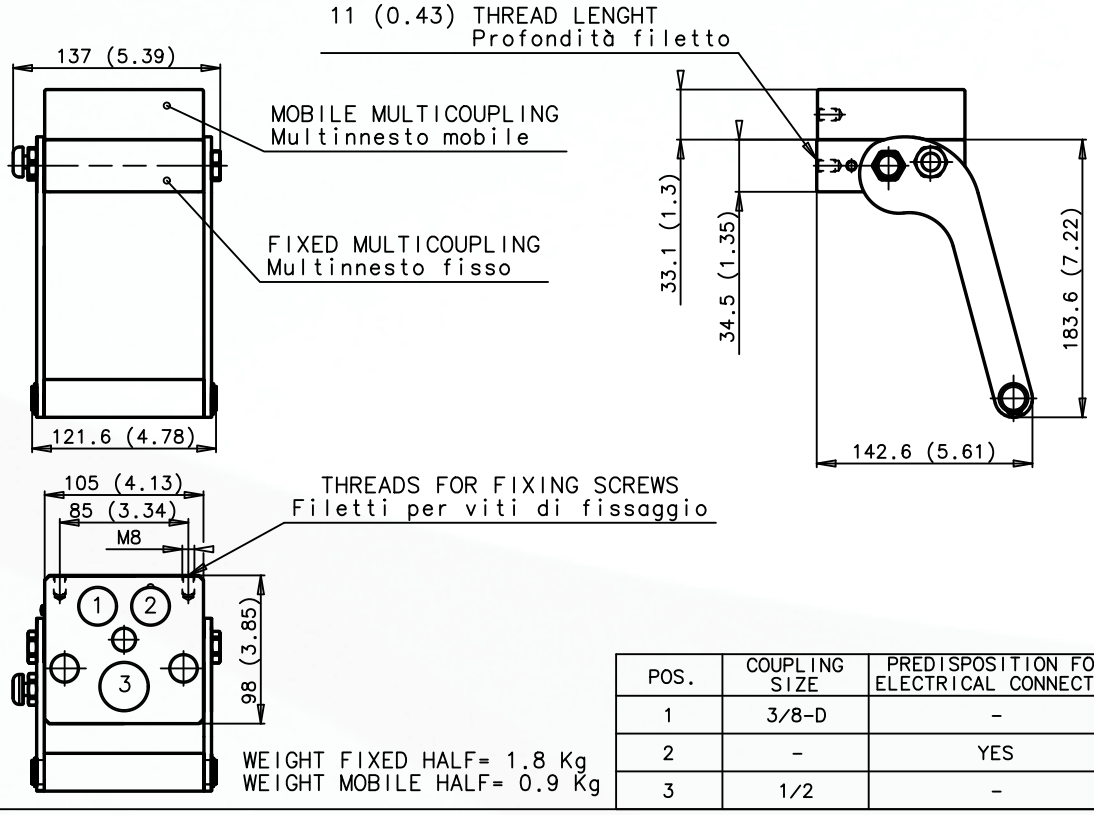

WEIGHT FIXED HALF= 1.8 Kg
WEIGHT MOBILE HALF= 0.9 Kg

POS.	COUPLING SIZE	PREDISPOSITION FOR ELECTRICAL CONNECTOR
1	3/8-D	-
2	-	YES
3	1/2	-

CAP FOR MULTICOUPLING DPT3
Tappo multinnesto fisso DPT3

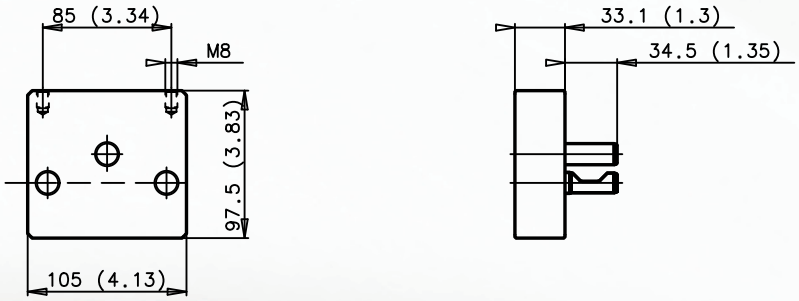

WEIGHT= 0.8 Kg

Dimensions in millimeters (Inch)

DP4-9 MULTICOUPLING

- Four lines size 3/8
- On request lines predisposed for electrical connector

DP4-9

MAX. MULTICOUPLING RESISTANCE
MAX. RESISTENZA MULTINNESTO 17000 N

FIXED AND MOBILE MULTICOUPLING
Multinnesto Fisso e Mobile

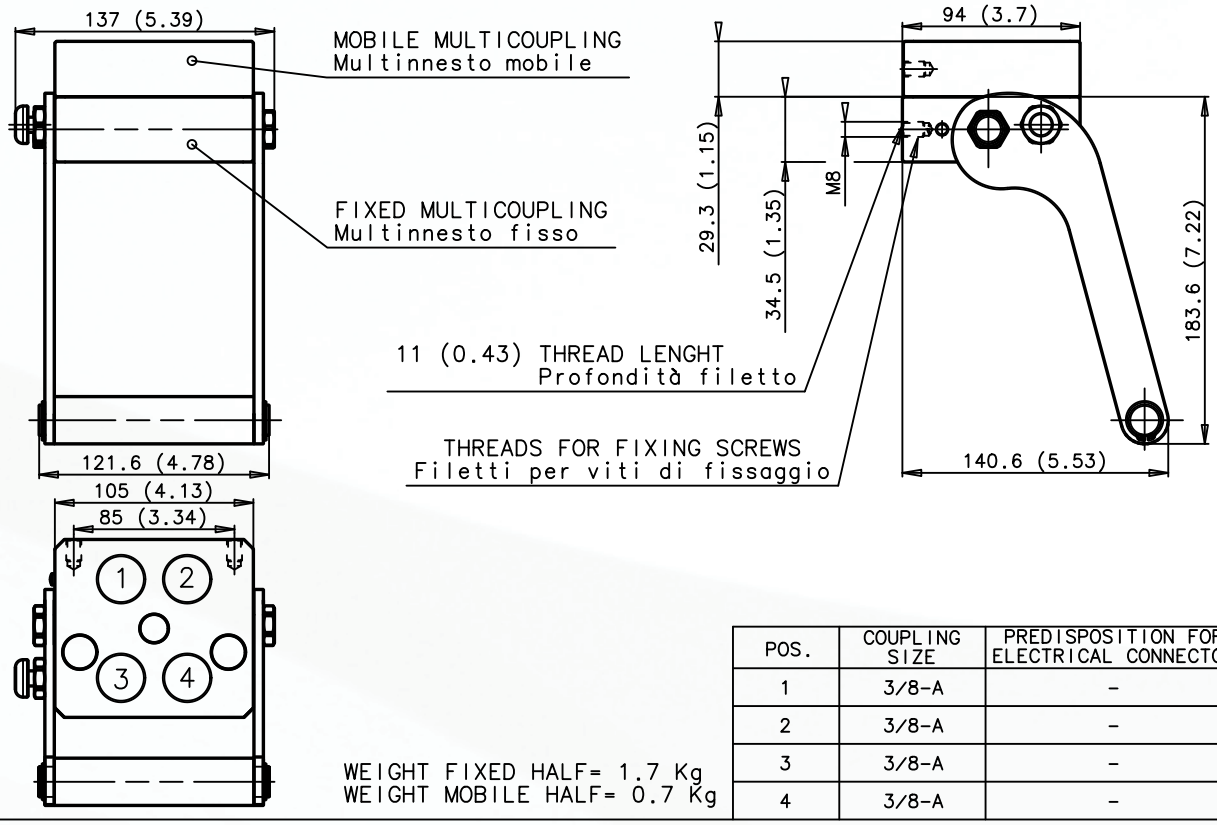

POS.	COUPLING SIZE	PREDISPOSITION FOR ELECTRICAL CONNECTOR
1	3/8-A	-
2	3/8-A	-
3	3/8-A	-
4	3/8-A	-

WEIGHT FIXED HALF= 1.7 Kg
WEIGHT MOBILE HALF= 0.7 Kg

CAP FOR MULTICOUPLING DP4-9
Tappo multinnesto fisso DP4-9

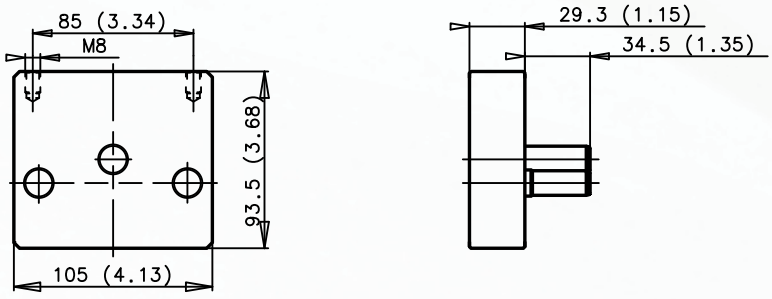

WEIGHT= 0.7 Kg

PARKING STATION DP4-9
Stazione di parcheggio DP4-9

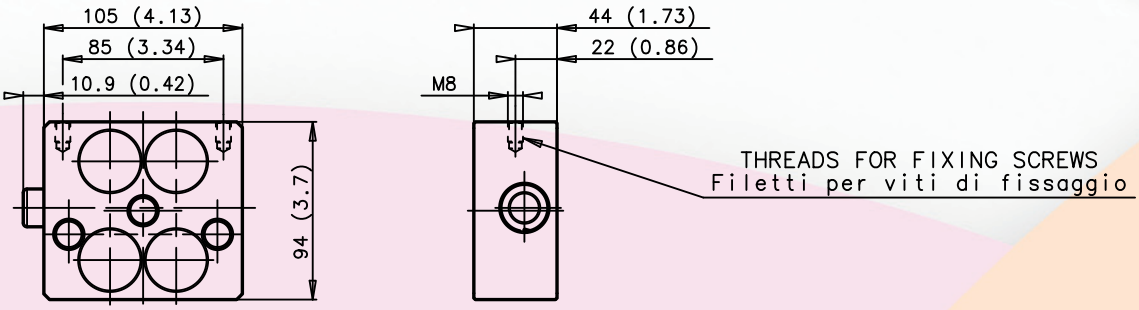

WEIGHT= 0.9 Kg

Dimensions in millimeters (Inch)

DP4-13 MULTICOUPLING

- Four lines size 1/2
- On request lines predisposed for electrical connector

DP4-13	MAX. MULTICOUPLING RESISTANCE MAX. RESISTENZA MULTINNESTO	17000 N

FIXED AND MOBILE MULTICOUPLING
Multinnesto Fisso e Mobile

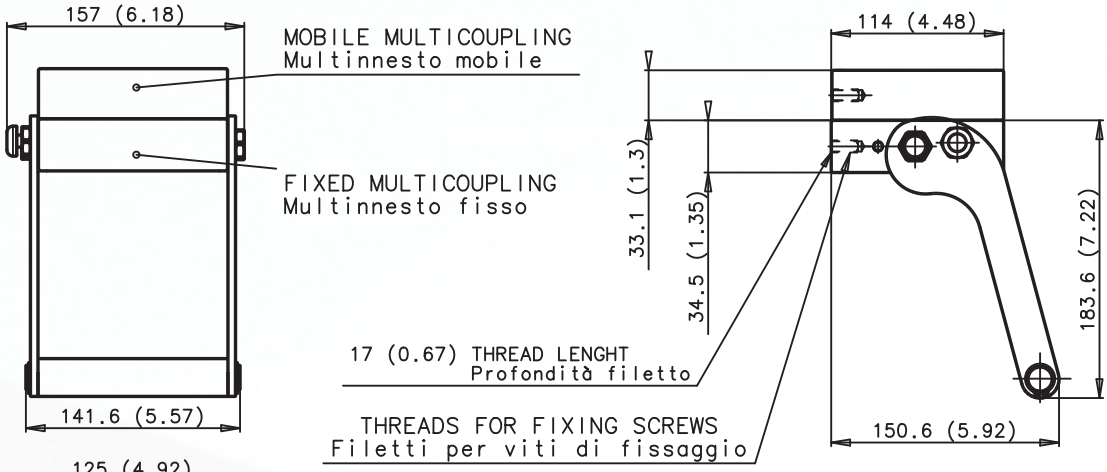

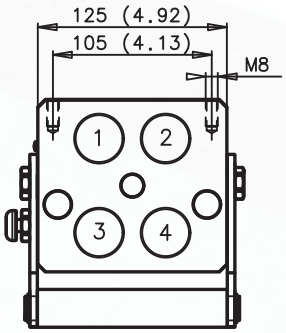

POS.	COUPLING SIZE	PREDISPOSITION FOR ELECTRICAL CONNECTOR
1	1/2	-
2	1/2	-
3	1/2	-
4	1/2	-

WEIGHT FIXED HALF= 2.0 Kg
WEIGHT MOBILE HALF= 1.0 Kg

CAP FOR MULTICOUPLING DP4-13
Tappo multinnesto fisso DP4-13

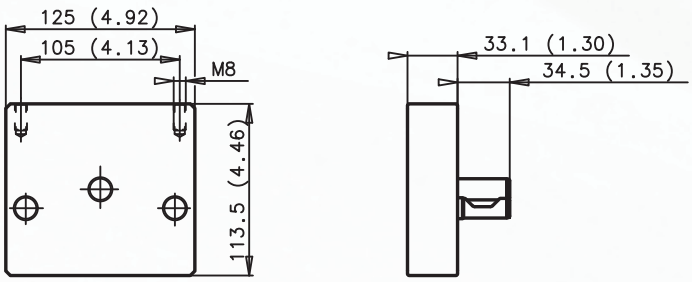

WEIGHT= 1.0 Kg

PARKING STATION DP4-13
Stazione di parcheggio DP4-13

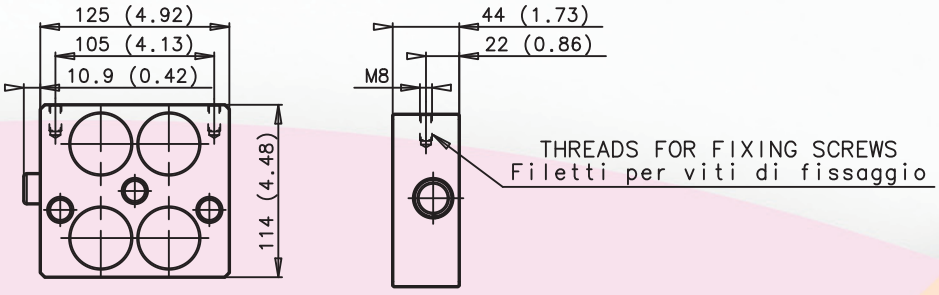

WEIGHT= 1.2 Kg

Dimensions in millimeters (Inch)

SERIES: **FAP-Z**

PATENTED

INTERCHANGE: Stucchi internal specification

MAIN APPLICATIONS

- Vehicles
- Drilling rings
- Mobile construction equipmen
- Industrial equipment

"FAP-Z" is the flat face coupling series without self retaining system, to assemble on multicoupling plates. They are manufactured in high resistance carbon steel with zinc iron surface treatment. The internal valve system and the flat face valve allow connection of the coupling safely even in presence of high internal residual pressure and at the same time avoiding fluid loss. The couplings are locked on the plates by threaded sleeve and anti-unscrewing seeger/snap rings. This locking system makes "FAP-Z" couplings suitable for impulse pressure applications.

Stucchi®
A CONSTANT FLOW OF SOLUTIONS

TECHNICAL FEATURES AND OPTIONS

- Interchangeability: Stucchi internal specification
- Valve system: Flat face
- Mechanical connection: Multicoupling system
- Connection system: By multicoupling
- Disconnection system: By multicoupling
- Connection with residual pressure: Allowed in the male coupling, female coupling or both.
- Disconnection with residual pressure: Allowed
- Threads available: BSP, NPT, SAE
- Threads on request: Metrics DIN or others
- Construction material: High resistance carbon steel.
  Male and female bodies with nitriding + oxidation treatment
- Surface treatment: Zinc iron
- External springs: AISI 302
- Internal springs: C72 steel
- Seals: standard in NBR (Nitrile), PUR (Polyurethane), POM (Delrin)
- Anti-extrusion rings: PTFE

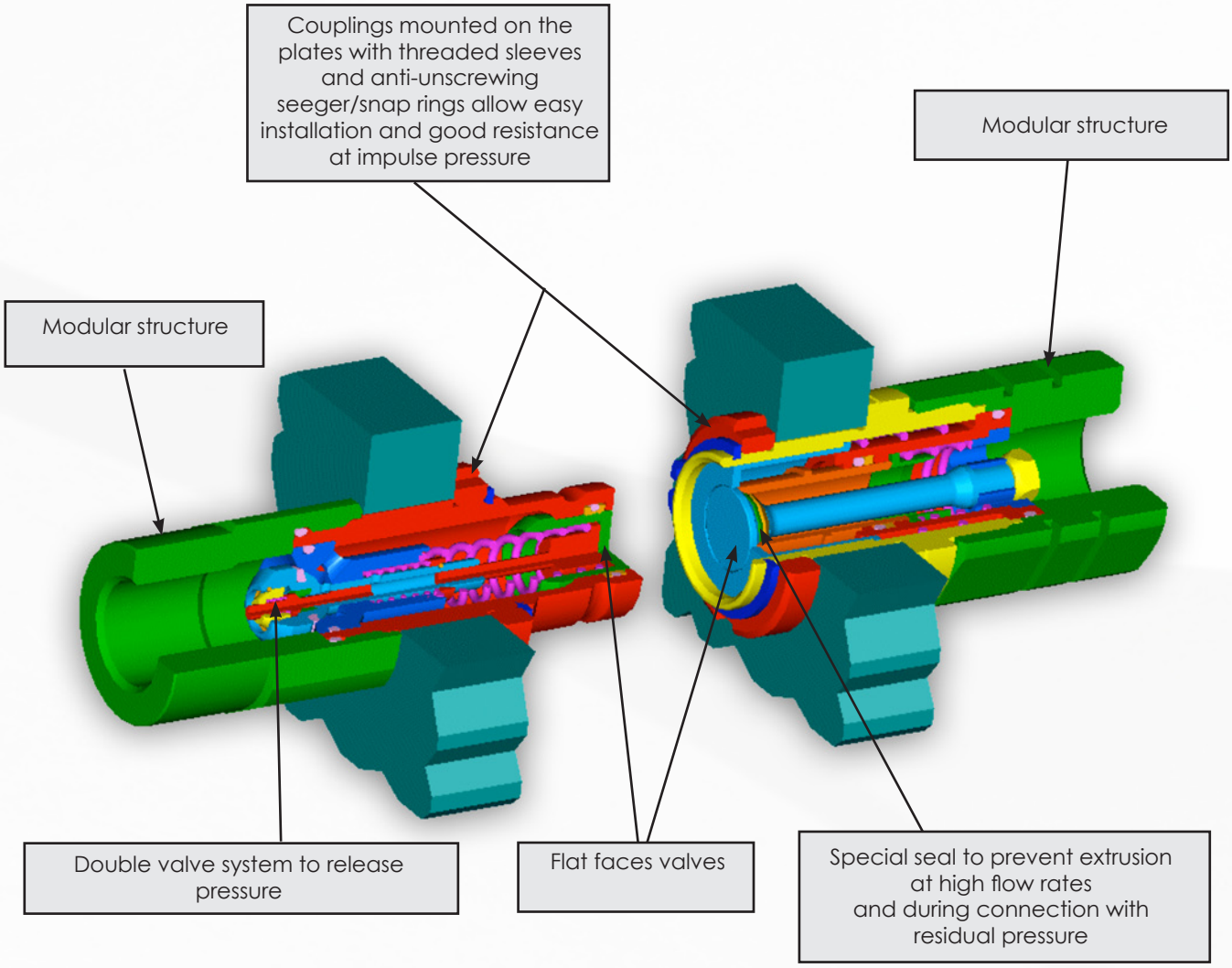

BENEFITS

- Flat face is easy to clean, helping to reduce the inclusion of contamination in the hydraulic circuit.
- Minimal fluid loss during connection / disconnection, reducing fluid loss to the environment.
- Minimal air inclusion during connection / disconnection, enhancing correct function of the circuit.
- Internal flow of valve design creates minimal pressure drop, maintaining circuit efficiency in the system.
- Internal pressure release valve system allows an easy connection with high internal residual pressure.
- The modular design allows for broad range of port configurations.
- Couplings without locking balls eliminate the "brinelling" effect.
- Compact slim design.
- Safe and simple to use.

HOW TO USE

- Before connecting clean the flat mating surface of coupling to avoid inclusion of contamination in the circuit.
- Connect and disconnect in according to the instruction of use for multicoupling.

WARNING !

- Do not use the female coupling disconnected as a cap with high impulse pressure.
- Do not couple-uncouple with flow in the circuit. Connection only allowed with residual pressure.
- Do not couple-uncouple when the temperature inside of the circuit is higher than 80 °C (176 °F).
- When the couplings are disconnected, it is suggested to use the protection cap and parking station.
- It is important to limit contamination in the circuit to avoid compromising the function of the internal valves.

PERFORMANCE

Description	Size	ISO Size	Rated flow		Max. flow suggested		Connect ° force		Hydrostatic pushing area coupled	Spillage *
	Inch	mm	l/min	GPM	l/min	GPM	Nm	lbf	Cm2	ml
FAP9Z	3/8	-	23	6,10	46	12,19	300	67,50	1,226	0,012
FAP13Z	1/2	-	45	11,93	90	23,85	320	72,00	1,893	0,020
FAP15Z	5/8	-	74	19,61	148	39,22	320	72,00	2,404	0,110
FAP17Z	3/4	-	100	26,50	200	53,00	500	112,50	3,298	0,032
FAP21Z	1	-	189	50,09	378	100,17	520	117,00	4,335	0,035

Description	Max. operating pressure						Burst pressure					
	Coupled		Male		Female		Coupled		Male		Female	
	MPa	psi	MPa	psi	MPa	psi	MPa	psi	MPa	psi	MPa	psi
FAP9Z	35	5075	35	5075	35	5075	120	17400	120	17400	100	14500
FAP13Z	33	4785	33	4785	33	4785	120	17400	120	17400	100	14500
FAP15Z	33	4785	33	4785	33	4785	120	17400	120	17400	100	14500
FAP17Z	33	4785	33	4785	33	4785	120	17400	120	17400	100	14500
FAP21Z	30	4350	30	4350	30	4350	100	14500	100	14500	80	11600

Description	Max. residual pressure during connection						Max. residual pressure during disconnection	
	Male Female to drain		Female Male to drain		Male and Female			
	MPa	psi	MPa	psi	MPa	psi	MPa	psi
FAP9Z	25	3625	25	3625	25	3625	25	3625
FAP13Z	25	3625	25	3625	20	2900	20	2900
FAP15Z	25	3625	25	3625	20	2900	20	2900
FAP17Z	25	3625	25	3625	15	2175	15	2175
FAP21Z	25	3625	25	3625	15	2175	15	2175

° Connect force without residual pressure. The force increase to increasing of internal residual pressure.
* Spillage is an indicative value of the fluid loss per couple-uncouple cycle without residual pressure.
- Temperature range: Standard seals NBR, PUR, POM from -20 °C to +100 °C (from -4 °F to +212 °F).
- Tests:
  The couplings coupled and the male uncoupled, have been tested at max. operating pressure for 200'000 impulses in according with ISO 7241-2.
  The female uncoupled have been tested for 100'000 impulses.

PRESSURE DROP

TESTS ESEGUITI IN CONFORMITA' A ISO 7241-2
TESTS IN ACCORDANCE WITH ISO 7241-2

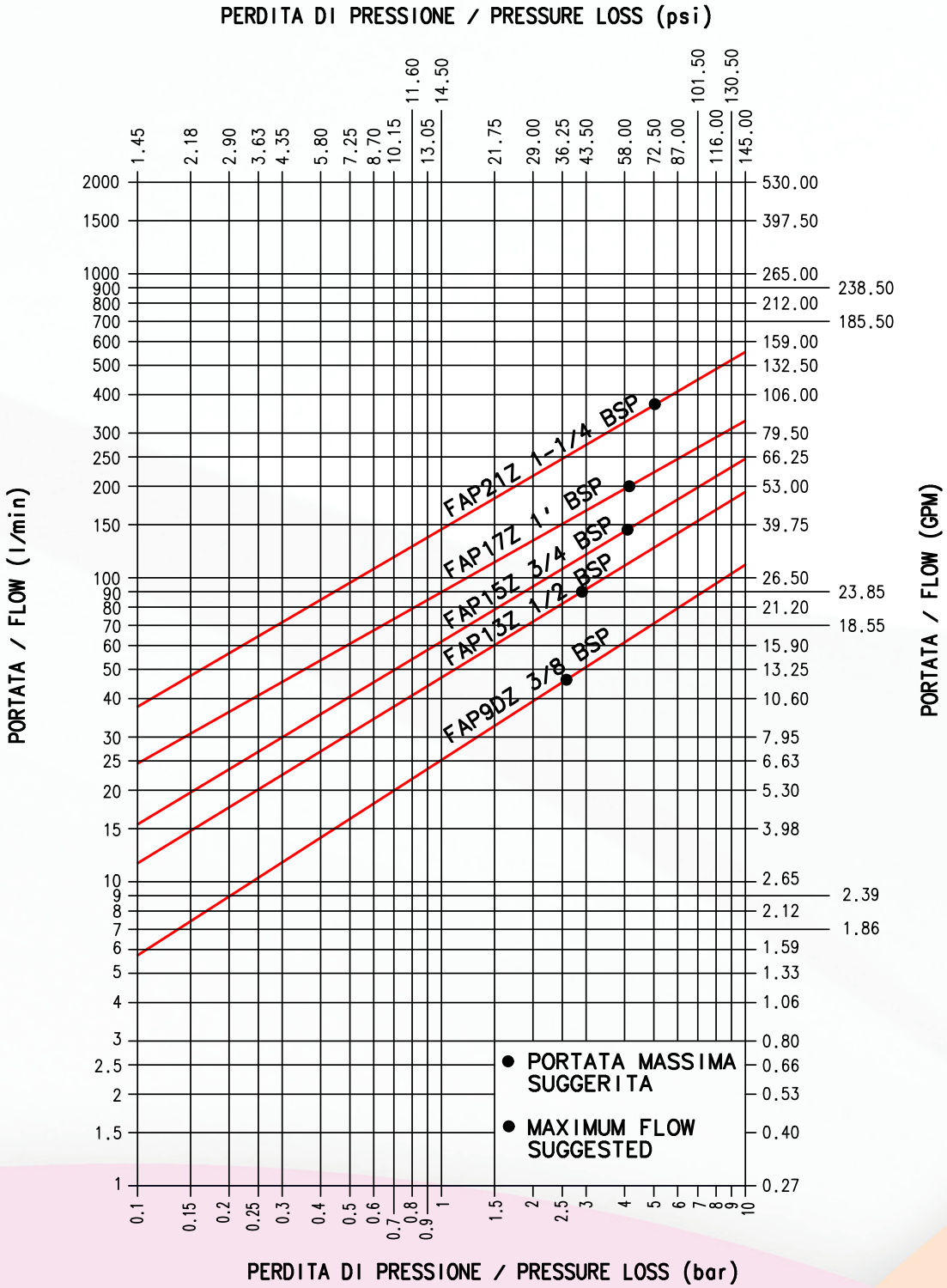

FLUIDO: OLIO ISO VG32
TEMPERATURA: 40°C
VISCOSITA': 28.8-35.2 mm²/s

FLUID: OIL ISO VG32
TEMPERATURE: 40°C
VISCOSITY: 28.8-35.2 mm²/s

OVERALL DIMENSIONS

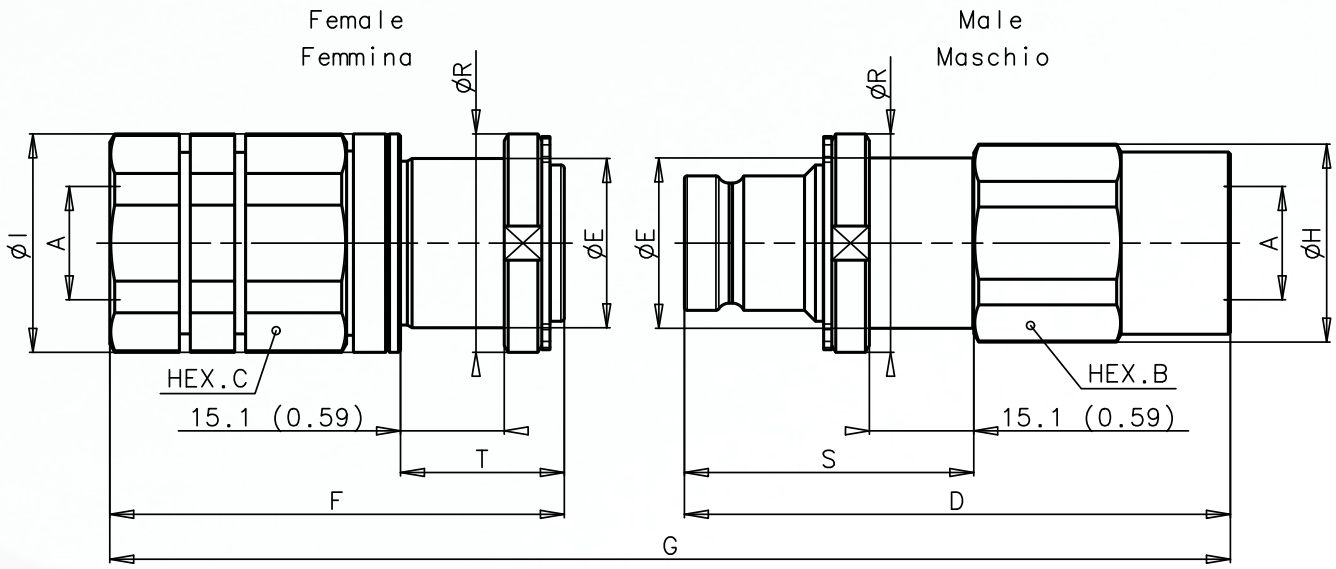

FEMALE BSPP THREAD (DIN 3852)

Description	A	Unit	B	C	D	E	F	G	H	I	R	S	T	Unit	Weight	
															Male	Female
FAP9AZ	3/8	mm	27	30	80	25	66,7	128,8	29	32	32	40,3	22,1	Kg	0,220	0,255
3/8 BSP		Inch	1,06	1,18	3,15	0,98	2,63	5,07	1,14	1,26	1,26	1,59	0,87	lb	0,49	0,56
FAP9AZ	1/2	mm	27	30	82,5	25	71,7	136,3	29	32	32	40,3	22,1	Kg	0,210	0,260
1/2 BSP		Inch	1,06	1,18	3,25	0,98	2,82	5,37	1,14	1,26	1,26	1,59	0,87	lb	0,46	0,57
FAP9DZ	3/8	mm	27	30	80	25	66,6	128,8	29	32	32	42,4	24	Kg	0,220	0,250
3/8 BSP		Inch	1,06	1,18	3,15	0,98	2,62	5,07	1,14	1,26	1,26	1,67	0,94	lb	0,49	0,55
FAP9DZ	1/2	mm	27	30	82,5	25	71,6	136,3	29	32	32	42,4	24	Kg	0,210	0,255
1/2 BSP		Inch	1,06	1,18	3,25	0,98	2,82	5,37	1,14	1,26	1,26	1,67	0,94	lb	0,46	0,56
FAP13Z	1/2	mm	36	36	91	32	80	150,6	38,5	40	39,8	45,4	23,6	Kg	0,440	0,445
1/2 BSP		Inch	1,42	1,42	3,58	1,26	3,15	5,93	1,52	1,57	1,57	1,79	0,93	lb	0,97	0,98
FAP13Z	3/4	mm	36	36	93,4	32	87	160	38,5	40	39,8	45,4	23,6	Kg	0,420	0,450
3/4 BSP		Inch	1,42	1,42	3,68	1,26	3,43	6,30	1,52	1,57	1,57	1,79	0,93	lb	0,93	0,99
FAP15Z	3/4	mm	36	41	95	34	86,8	161,4	38,5	44,8	43,5	45,3	23,6	Kg	0,435	0,575
3/4 BSP		Inch	1,42	1,61	3,74	1,34	3,42	6,35	1,52	1,76	1,71	1,78	0,93	lb	0,96	1,27
FAP17Z	3/4	mm	46	46	108,5	40	102,6	184,4	49,8	49,8	49	51,9	23,6	Kg	0,820	0,985
3/4 BSP		Inch	1,81	1,81	4,27	1,57	4,04	7,26	1,96	1,96	1,93	2,04	0,93	lb	1,81	2,17
FAP17Z	1	mm	46	46	108,5	40	104,6	186,4	49,8	49,8	49	51,9	23,6	Kg	0,770	0,935
1 BSP		Inch	1,81	1,81	4,27	1,57	4,12	7,34	1,96	1,96	1,93	2,04	0,93	lb	1,70	2,06
FAP21Z	1	mm	55	55	125,5	52	111,4	207,6	59,8	59,8	59	54,6	23,6	Kg	1,320	1,640
1 BSP		Inch	2,17	2,17	4,94	2,05	4,39	8,17	2,35	2,35	2,32	2,15	0,93	lb	2,91	3,62
FAP21Z	1-1/4	mm	55	55	123,5	52	112,4	206,6	59,8	59,8	59	54,6	23,6	Kg	1,220	1,545
1-1/4 BSP		Inch	2,17	2,17	4,86	2,05	4,43	8,13	2,35	2,35	2,32	2,15	0,93	lb	2,69	3,41

OVERALL DIMENSIONS

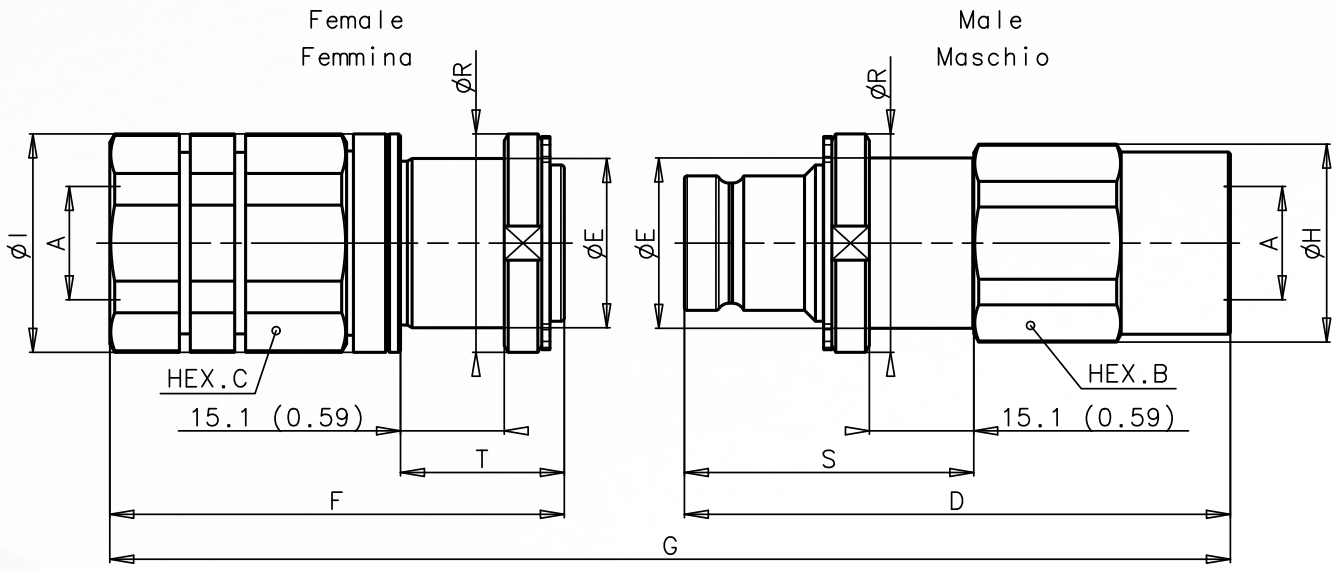

FEMALE NPT THREAD (ANSI B.1.20.3)

Description	A	Unit	B	C	D	E	F	G	H	I	R	S	T	Unit	Weight	
															Male	Female
FAP9AZ	3/8	mm	27	30	80	25	66,7	128,8	29	32	32	40,3	22,1	Kg	0,220	0,255
3/8 NPT		Inch	1,06	1,18	3,15	0,98	2,63	5,07	1,14	1,26	1,26	1,59	0,87	lb	0,49	0,56
FAP9AZ	1/2	mm	27	30	82,5	25	71,7	136,3	29	32	32	40,3	22,1	Kg	0,210	0,260
1/2 NPT		Inch	1,06	1,18	3,25	0,98	2,82	5,37	1,14	1,26	1,26	1,59	0,87	lb	0,46	0,57
FAP9DZ	3/8	mm	27	30	80	25	66,6	128,8	29	32	32	42,4	24	Kg	0,220	0,250
3/8 NPT		Inch	1,06	1,18	3,15	0,98	2,62	5,07	1,14	1,26	1,26	1,67	0,94	lb	0,49	0,55
FAP9DZ	1/2	mm	27	30	82,5	25	71,6	136,3	29	32	32	42,4	24	Kg	0,210	0,255
1/2 NPT		Inch	1,06	1,18	3,25	0,98	2,82	5,37	1,14	1,26	1,26	1,67	0,94	lb	0,46	0,56
FAP13Z	1/2	mm	36	36	91	32	80	150,6	38,5	40	39,8	45,4	23,6	Kg	0,440	0,445
1/2 NPT		Inch	1,42	1,42	3,58	1,26	3,15	5,93	1,52	1,57	1,57	1,79	0,93	lb	0,97	0,98
FAP13Z	3/4	mm	36	36	93,4	32	87	160	38,5	40	39,8	45,4	23,6	Kg	0,420	0,450
3/4 NPT		Inch	1,42	1,42	3,68	1,26	3,43	6,30	1,52	1,57	1,57	1,79	0,93	lb	0,93	0,99
FAP15Z	3/4	mm	36	41	95	34	86,8	161,4	38,5	44,8	43,5	45,3	23,6	Kg	0,435	0,575
3/4 NPT		Inch	1,42	1,61	3,74	1,34	3,42	6,35	1,52	1,76	1,71	1,78	0,93	lb	0,96	1,27
FAP17Z	3/4	mm	46	46	108,5	40	101,6	183,4	49,8	49,8	49	51,9	23,6	Kg	0,820	0,985
3/4 NPT		Inch	1,81	1,81	4,27	1,57	4,00	7,22	1,96	1,96	1,93	2,04	0,93	lb	1,81	2,17
FAP17Z	1	mm	46	46	108,5	40	104,6	186,4	49,8	49,8	49	51,9	23,6	Kg	0,770	0,935
1 NPT		Inch	1,81	1,81	4,27	1,57	4,12	7,34	1,96	1,96	1,93	2,04	0,93	lb	1,70	2,06
FAP21Z	1	mm	55	55	125,5	52	111,4	207,6	59,8	59,8	59	54,6	23,6	Kg	1,320	1,640
1 NPT		Inch	2,17	2,17	4,94	2,05	4,39	8,17	2,35	2,35	2,32	2,15	0,93	lb	2,91	3,62
FAP21Z	1-1/4	mm	55	55	123,5	52	112,4	206,6	59,8	59,8	59	54,6	23,6	Kg	1,220	1,545
1-1/4 NPT		Inch	2,17	2,17	4,86	2,05	4,43	8,13	2,35	2,35	2,32	2,15	0,93	lb	2,69	3,41

OVERALL DIMENSIONS

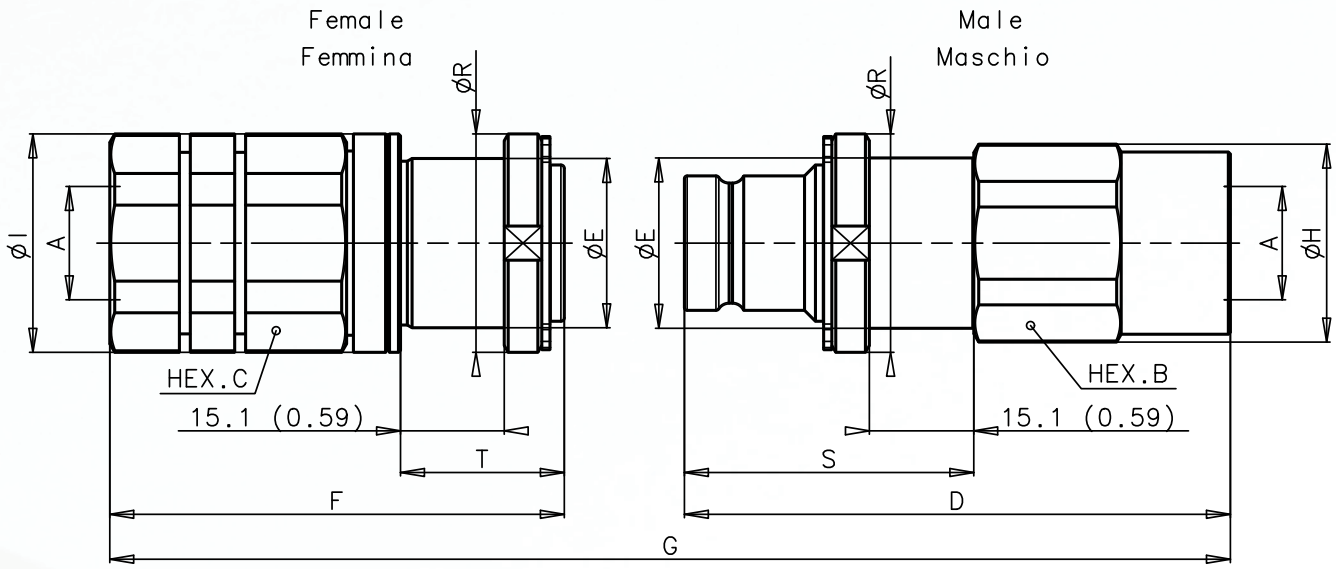

FEMALE SAE THREAD (SAE J1926-1)

Description	A	Unit	B	C	D	E	F	G	H	I	R	S	T	Unit	Weight	
															Male	Female
FAP9AZ	9/16-	mm	27	30	81,3	25	66,7	130,1	29	32	32	40,3	22,1	Kg	0,220	0,255
3/8 SAE	18UNF	Inch	1,06	1,18	3,20	0,98	2,63	5,12	1,14	1,26	1,26	1,59	0,87	lb	0,49	0,56
FAP9AZ	3/4-	mm	27	30	82,5	25	71,7	136,3	29	32	32	40,3	22,1	Kg	0,210	0,260
1/2 SAE	16UNF	Inch	1,06	1,18	3,25	0,98	2,82	5,37	1,14	1,26	1,26	1,59	0,87	lb	0,46	0,57
FAP9AZ	7/8-	mm	27	30	85,5	25	73,7	141,3	29	32	32	40,3	22,1	Kg	0,210	0,260
5/8 SAE	14UNF	Inch	1,06	1,18	3,37	0,98	2,90	5,56	1,14	1,26	1,26	1,59	0,87	lb	0,46	0,57
FAP9DZ	9/16-	mm	27	30	81,3	25	66,6	130,1	29	32	32	42,4	24	Kg	0,220	0,250
3/8 SAE	18UNF	Inch	1,06	1,18	3,20	0,98	2,62	5,12	1,14	1,26	1,26	1,67	0,94	lb	0,49	0,55
FAP9DZ	3/4-	mm	27	30	82,5	25	71,6	136,3	29	32	32	42,4	24	Kg	0,210	0,255
1/2 SAE	16UNF	Inch	1,06	1,18	3,25	0,98	2,82	5,37	1,14	1,26	1,26	1,67	0,94	lb	0,46	0,56
FAP9DZ	7/8	mm	27	30	85,5	25	73,6	141,3	29	32	32	42,4	24	Kg	0,210	0,255
5/8 SAE	14UNF	Inch	1,06	1,18	3,37	0,98	2,90	5,56	1,14	1,26	1,26	1,67	0,94	lb	0,46	0,56
FAP13Z	3/4-	mm	36	36	89,3	32	80	148,9	38,5	40	39,8	45,4	23,6	Kg	0,440	0,445
1/2 SAE	16UNF	Inch	1,42	1,42	3,52	1,26	3,15	5,86	1,52	1,57	1,57	1,79	0,93	lb	0,97	0,98
FAP13Z	7/8-	mm	36	36	91	32	82	152,6	38,5	40	39,8	45,4	23,6	Kg	0,440	0,445
5/8 SAE	14UNF	Inch	1,42	1,42	3,58	1,26	3,23	6,01	1,52	1,57	1,57	1,79	0,93	lb	0,97	0,98
FAP13Z	1-1/16-	mm	36	36	93,4	32	87	160	38,5	40	39,8	45,4	23,6	Kg	0,420	0,450
3/4 SAE	12UN	Inch	1,42	1,42	3,68	1,26	3,43	6,30	1,52	1,57	1,57	1,79	0,93	lb	0,93	0,99
FAP15Z	1-1/16-	mm	36	41	95	34	86,8	161,4	38,5	44,8	43,5	45,3	23,6	Kg	0,435	0,575
3/4 SAE	12UN	Inch	1,42	1,61	3,74	1,34	3,42	6,35	1,52	1,76	1,71	1,78	0,93	lb	0,96	1,27
FAP17Z	1-1/16-	mm	46	46	108,5	40	104,6	186,4	49,8	49,8	49	51,9	23,6	Kg	0,820	0,985
3/4 SAE	12UN	Inch	1,81	1,81	4,27	1,57	4,12	7,34	1,96	1,96	1,93	2,04	0,93	lb	1,81	2,17
FAP17Z	1-5/16-	mm	46	46	108,5	40	104,6	186,4	49,8	49,8	49	51,9	23,6	Kg	0,770	0,935
1 SAE	12UN	Inch	1,81	1,81	4,27	1,57	4,12	7,34	1,96	1,96	1,93	2,04	0,93	lb	1,70	2,06
FAP21Z	1-5/16-	mm	55	55	125,5	52	111,4	207,6	59,8	59,8	59	54,6	23,6	Kg	1,320	1,640
1 SAE	12 UN	Inch	2,17	2,17	4,94	2,05	4,39	8,17	2,35	2,35	2,32	2,15	0,93	lb	2,91	3,62
FAP21Z	1-5/8-	mm	55	55	123,5	52	112,4	206,6	59,8	59,8	59	54,6	23,6	Kg	1,220	1,545
1-1/4 SAE	12UN	Inch	2,17	2,17	4,86	2,05	4,43	8,13	2,35	2,35	2,32	2,15	0,93	lb	2,69	3,41

SERIES: **FAP-P**

PATENTED

INTERCHANGE: Stucchi internal specification

MAIN APPLICATIONS

- Agricultural equipment
- Vehicles

"FAP-P" is the flat face coupling series without self retaining system, to assemble on multicoupling plates. They are manufactured in high resistance carbon steel with zinc plated surface treatment.
The internal valve system and the flat face valve allow connection of the coupling safely even in presence of high internal residual pressure and at the same time avoiding fluid loss.
"FAP-P" couplings are locked on the plates by simple seeger/snap rings and they are indicated for static pressure applications.

Stucchi®
A CONSTANT FLOW OF SOLUTIONS

TECHNICAL FEATURES AND OPTIONS

- Interchangeability: Stucchi internal specification
- Valve system: Flat face
- Mechanical connection: Multicoupling system
- Connection system: By multicoupling
- Disconnection system: By multicoupling
- Connection with residual pressure: Allowed in the male coupling, female coupling or both.
- Disconnection with residual pressure: Allowed
- Threads available: BSP
- Threads on request: External BSP or others
- Construction material: High resistance carbon steel.
  Male body with special treatment nitriding + oxidation (QPQ)
- Surface treatment: Zinc plated
- External springs: AISI 302
- Internal springs: C72 steel
- Seals: standard in NBR (Nitrile), PUR (Polyurethane), POM (Delrin)
- Anti-extrusion rings: PTFE

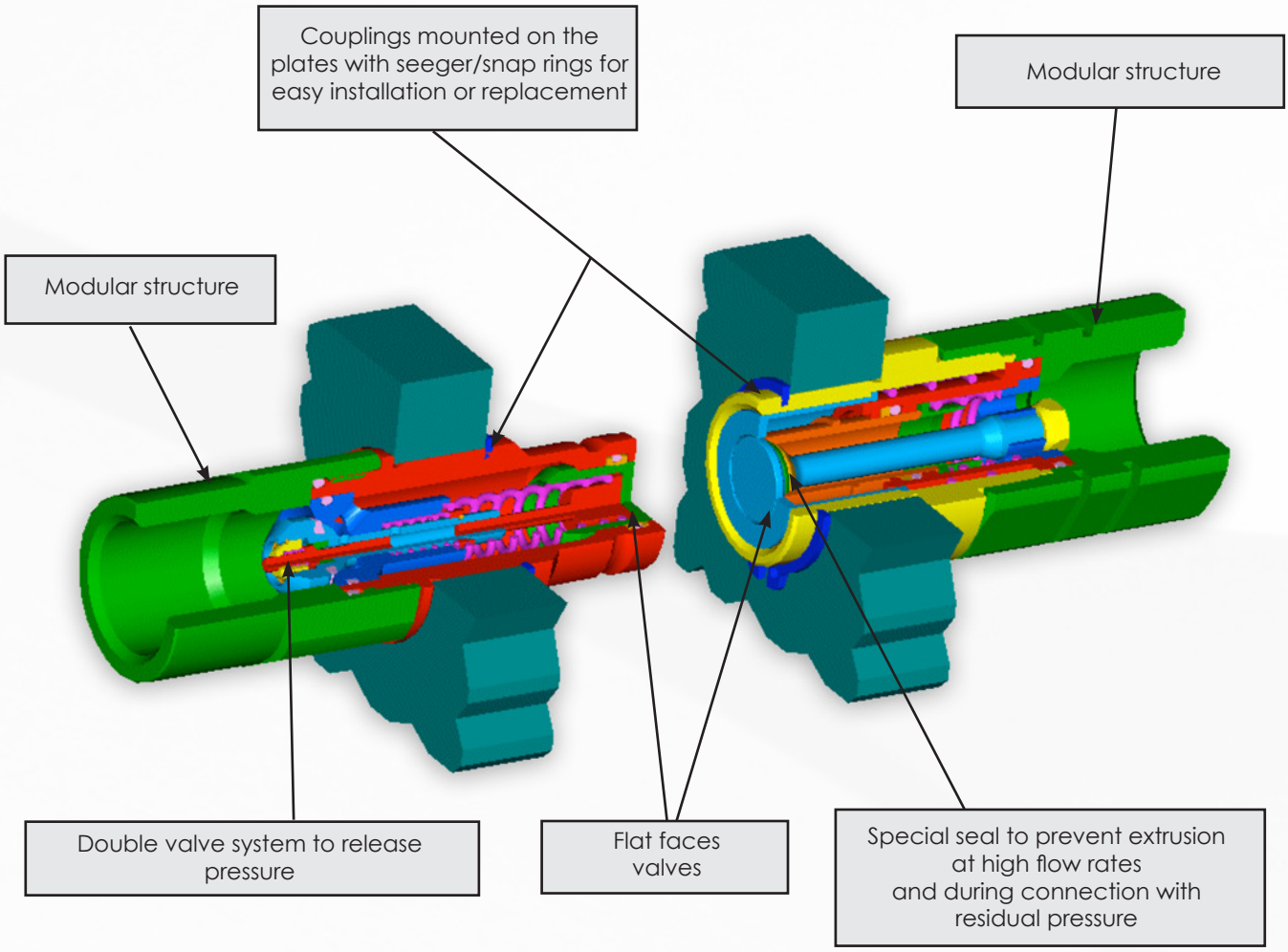

BENEFITS

- Flat face is easy to clean, helping to reduce the inclusion of contamination in the hydraulic circuit.
- Minimal fluid loss during connection / disconnection, reducing fluid loss to the environment.
- Minimal air inclusion during connection / disconnection, enhancing correct function of the circuit.
- Internal flow of valve design creates minimal pressure drop, maintaining circuit efficiency in the system.
- Internal pressure release valve system allows an easy connection with high internal residual pressure.
- The modular design allows for broad range of port configurations.
- Couplings without locking balls eliminate the "brinelling" effect.
- Compact slim design.
- Safe and simple to use.

HOW TO USE

- Before connecting clean the flat mating surface of coupling to avoid inclusion of contamination in the circuit.
- Connect and disconnect in according to the instruction of use for multicoupling.

WARNING !

- Do not use in applications with impulse pressure.
- Do not couple-uncouple with flow in the circuit. Connection only allowed with residual pressure.
- Do not couple-uncouple when the temperature inside of the circuit is higher than 80 °C (176 °F).
- When the couplings are disconnected, it is suggested to use the protection cap and parking station.
- It is important to limit contamination in the circuit to avoid compromising the function of the internal valves.

PERFORMANCE

Description	Size	ISO Size	Rated flow		Max. flow suggested		Connect ° force		Hydrostatic pushing area coupled	Spillage *
	Inch	mm	l/min	GPM	l/min	GPM	Nm	lbf	Cm2	ml
FAP7	1/4	-	12	3,18	24	6,36	130	29,25	0,723	0,010
FAP9P	3/8	-	23	6,10	46	12,19	300	67,50	1,226	0,012
FAP13P	1/2	-	45	11,93	90	23,85	320	72,00	1,893	0,020
FAP15P	5/8	-	74	19,61	148	39,22	320	72,00	2,404	0,110
FAP17P	3/4	-	100	26,50	200	53,00	500	112,50	3,298	0,032
FAP21P	1	-	189	50,09	378	100,17	520	117,00	4,335	0,035

Description	Max. operating pressure						Burst pressure					
	Coupled		Male		Female		Coupled		Male		Female	
	MPa	psi	MPa	psi	MPa	psi	MPa	psi	MPa	psi	MPa	psi
FAP7	42	6090	42	6090	42	6090	126	18270	126	18270	126	18270
FAP9P	35	5075	35	5075	35	5075	120	17400	120	17400	100	14500
FAP13P	33	4785	33	4785	33	4785	120	17400	120	17400	100	14500
FAP15P	33	4785	33	4785	33	4785	120	17400	120	17400	100	14500
FAP17P	33	4785	33	4785	33	4785	120	17400	120	17400	100	14500
FAP21P	30	4350	30	4350	30	4350	100	14500	100	14500	80	11600

Description	Max. residual pressure during connection						Max. residual pressure during disconnection	
	Male Female to drain		Female Male to drain		Male and Female			
	MPa	psi	MPa	psi	MPa	psi	MPa	psi
FAP7	30	4350	30	4350	25	3625	25	3625
FAP9P	25	3625	25	3625	25	3625	25	3625
FAP13P	25	3625	25	3625	20	2900	20	2900
FAP15P	25	3625	25	3625	20	2900	20	2900
FAP17P	25	3625	25	3625	15	2175	15	2175
FAP21P	25	3625	25	3625	15	2175	15	2175

° Connect force without residual pressure. The force increase to increasing of internal residual pressure.
* Spillage is an indicative value of the fluid loss per couple-uncouple cycle without residual pressure.
- Temperature range: Standard seals NBR, PUR, POM from -20 °C to +100 °C (from -4 °F to +212 °F).
- Note: FAP7 has metal to metal sealing system in the internal valve of male and in the valve of female coupling.
- Tests:

- The couplings have been tested at max. operating pressure for 30'000 impulses in according with ISO 7241-2.

PRESSURE DROP

TESTS ESEGUITI IN CONFORMITA' A ISO 7241-2
TESTS IN ACCORDANCE WITH ISO 7241-2

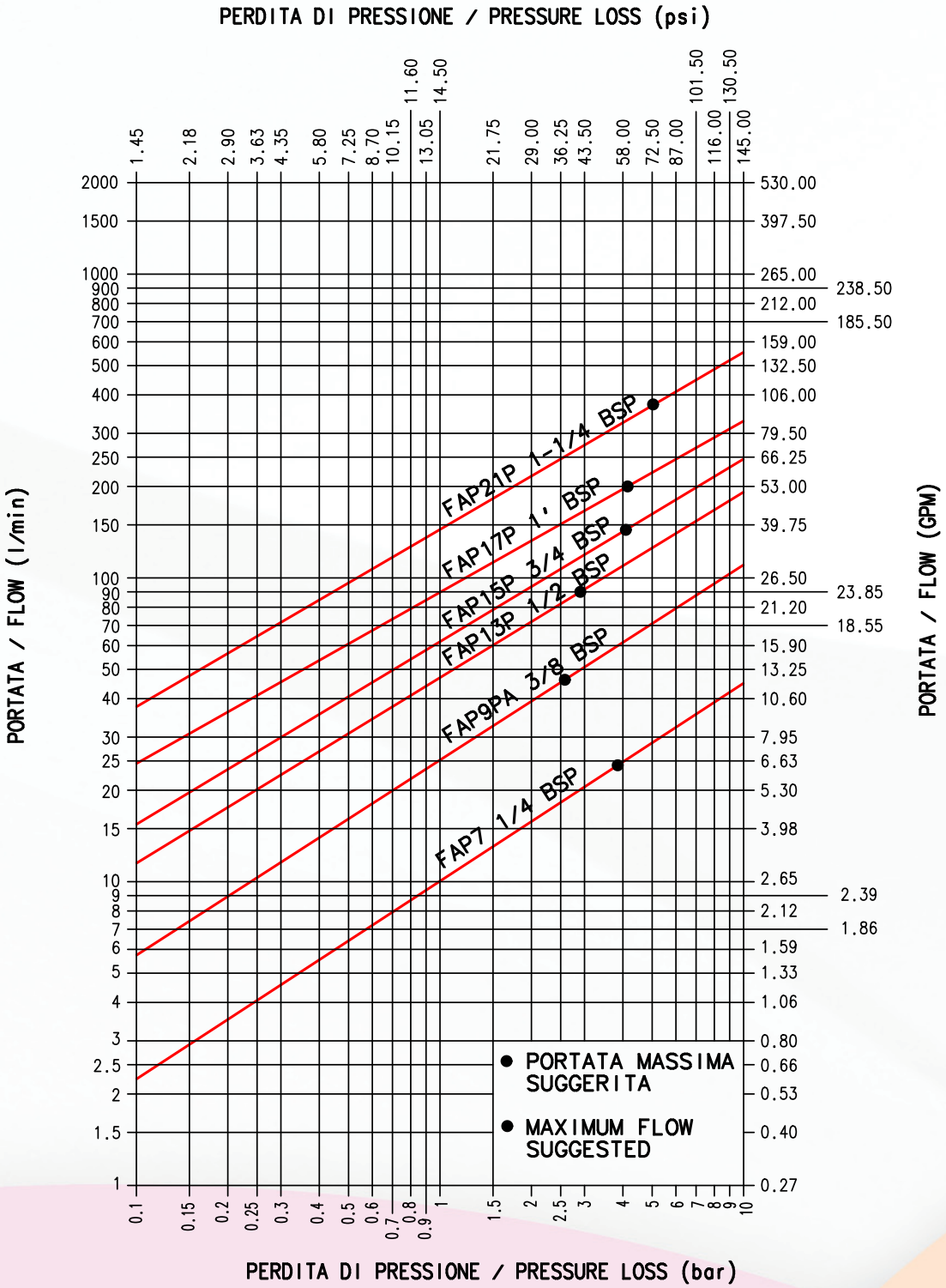

FLUIDO: OLIO ISO VG32
TEMPERATURA: 40°C
VISCOSITA': 28.8-35.2 mm²/s

FLUID: OIL ISO VG32
TEMPERATURE: 40°C
VISCOSITY: 28.8-35.2 mm²/s

OVERALL DIMENSIONS

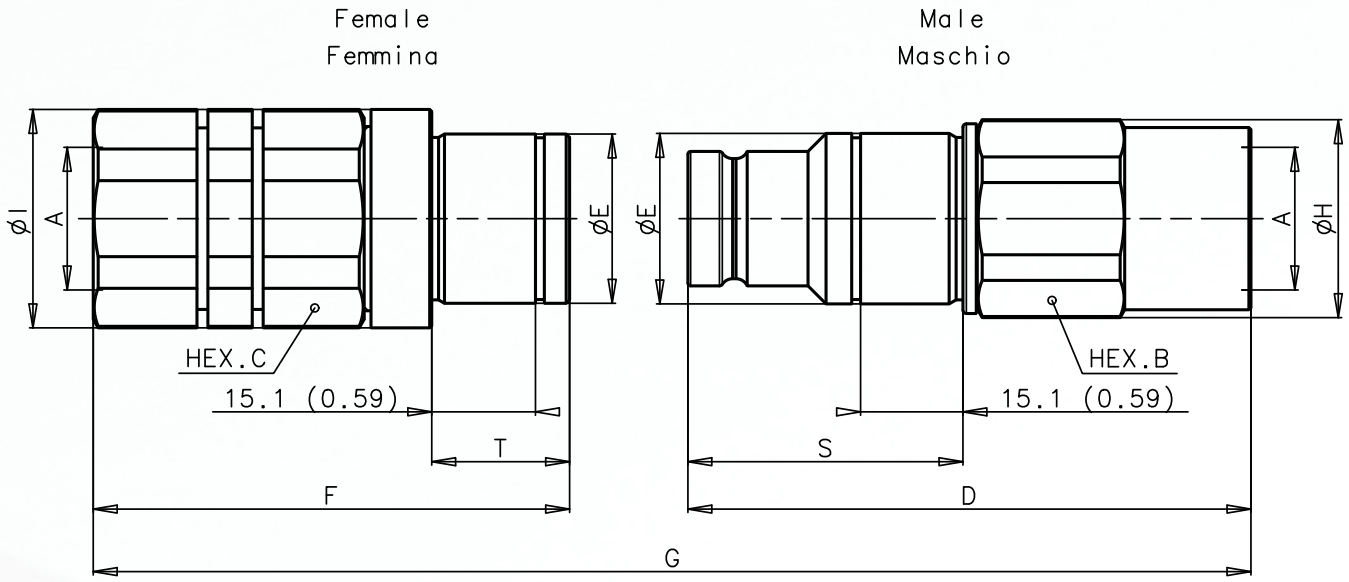

FEMALE BSPP THREAD (DIN 3852)

Description	A	Unit	B	C	D	E	F	G	H	I	S	T	Unit	Weight	
														Male	Female
FAP7	1/4	mm	22	27	71	22	53,1	113,3	26,5	29	41	18,4	Kg	0,156	0,162
1/4 BSP		Inch	0,87	1,06	2,80	0,87	2,09	4,46	1,04	1,14	1,61	0,72	lb	0,34	0,36
FAP9PA	3/8	mm	27	30	80	25	64,8	128,8	29	32	40,3	20,2	Kg	0,209	0,241
3/8 BSP		Inch	1,06	1,18	3,15	0,98	2,55	5,07	1,14	1,26	1,59	0,80	lb	0,46	0,53
FAP9PA	1/2	mm	27	3	82,5	25	69,8	136,3	29	32	40,3	20,2	Kg	0,201	0,246
1/2 BSP		Inch	1,06	1,18	3,25	0,98	2,75	5,37	1,14	1,26	1,59	0,80	lb	0,44	0,54
FAP9PD	3/8	mm	27	30	80	25	64,8	128,8	29	32	42,4	22,2	Kg	0,207	0,237
3/8 BSP		Inch	1,06	1,18	3,15	0,98	2,55	5,07	1,14	1,26	1,67	0,87	lb	0,46	0,52
FAP9PD	1/2	mm	27	30	82,5	25	69,8	136,3	29	32	42,4	22,2	Kg	0,198	0,243
1/2 BSP		Inch	1,06	1,18	3,25	0,98	2,75	5,37	1,14	1,26	1,67	0,87	lb	0,44	0,54
FAP13P	1/2	mm	36	36	91	32	76,7	150,5	38,5	40	45,4	20,4	Kg	0,419	0,419
1/2 BSP		Inch	1,42	1,42	3,58	1,26	3,02	5,93	1,52	1,57	1,79	0,80	lb	0,92	0,92
FAP13P	3/4	mm	36	36	93,4	32	83,7	159,9	38,5	40	45,4	20,4	Kg	0,400	0,428
3/4 BSP		Inch	1,42	1,42	3,68	1,26	3,30	6,30	1,52	1,57	1,79	0,80	lb	0,88	0,94
FAP15P	3/4	mm	36	41	95	34	83,9	161,4	38,5	44,8	45,3	20,7	Kg	0,415	0,547
3/4 BSP		Inch	1,42	1,61	3,74	1,34	3,30	6,35	1,52	1,76	1,78	0,81	lb	0,91	1,21
FAP17P	1	mm	46	46	108,5	40	100,7	186,4	49,8	49,8	51,9	19,7	Kg	0,736	0,885
1 BSP		Inch	1,81	1,81	4,27	1,57	3,96	7,34	1,96	1,96	2,04	0,78	lb	1,62	1,95
FAP21P	1-1/4	mm	55	55	123,5	52	108,3	206,3	59,8	59,8	54,6	19,8	Kg	1,198	1,466
1-1/4 BSP		Inch	2,17	2,17	4,86	2,05	4,26	8,12	2,35	2,35	2,15	0,78	lb	2,64	3,23

ELECTRICAL CONNECTORS

In addition to the couplings for fluid energy transmission, it is possible to fit in the multicouplings the electrical connectors for the electric energy transmission. They are suitable for all low tension electronic devices such as instrumentation , signals, solenoid valves etc...

TECHNICAL FEAUTURES

- Max. number of contacts: 7
- Contact diameter: 2 mm
- Ampere per each contact: 12 service to 15 max.
- Connection between contact and electrical wire: To crimp
- Contacts guaranteed for 100000 connection disconnection
- Construction material: External bodies in brass nickel plated for a good corrosion resistance
  Internal parts and contacts manufactured by the best specialists.
- Seals: NBR (Nitrile)

FEMALE EC FOR MOBILE MULTICOUPLING
Femmina EC per multinnesto mobile

MALE EC FOR FIXED MULTICOUPLING
Maschio EC per multinnesto fisso

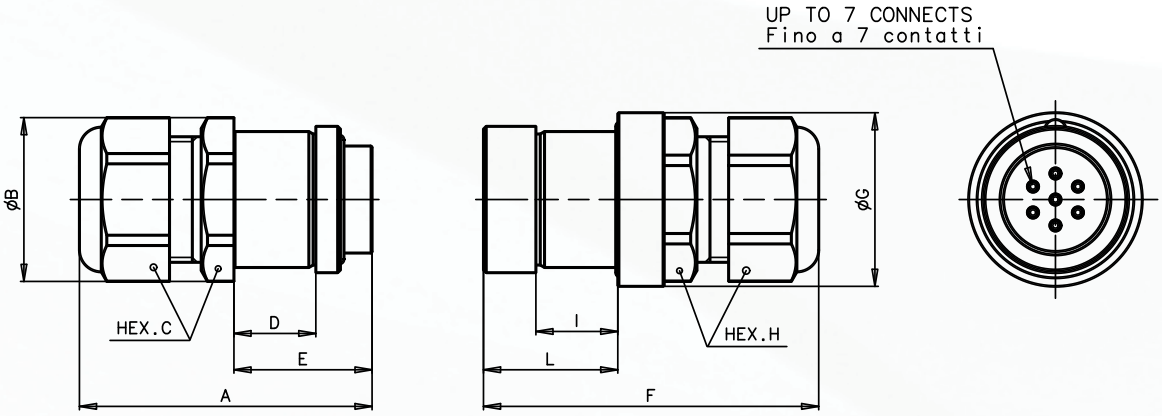

Description	Unit	A	B	C	D	E	F	G	H	I	L	Unit	Weight	
													Male	Female
F-EC..	mm	53,6	30	27	15	25,3	61,4	31,8	27	15	24,6	Kg	0,950	0,055
M-EC..	Inch	2,11	1,18	1,06	0,59	1,00	2,42	1,25	1,06	0,59	0,97	lb	2,09	0,12
F-EC..	mm	53,6	30	27	15	25,3	61,4	31,8	27	15	28,4	Kg	0,900	0,055
M-EC..D	Inch	2,11	1,18	1,06	0,59	1,00	2,42	1,25	1,06	0,59	1,12	lb	1,98	0,12
F-EC..-13	mm	53,6	34,8	27	15	25,1	61,4	34,8	27	15	28,4	Kg	0,173	0,108
M-EC..-13	Inch	2,11	1,37	1,06	0,59	0,99	2,42	1,37	1,06	0,59	1,12	lb	0,38	0,24
F-EC..	mm	53,6	30	27	15	25,3	72,4	30	27	34,5	44,1	Kg	0,950	0,055
M-EC..J	Inch	2,11	1,18	1,06	0,59	1,00	2,85	1,18	1,06	1,36	1,74	lb	2,09	0,12
F-EC..	mm	53,6	30	27	15	25,3	76,2	30	27	34,5	47,9	Kg	0,990	0,055
M-EC..DT	Inch	2,11	1,18	1,06	0,59	1,00	3,00	1,18	1,06	1,36	1,89	lb	2,18	0,12

PLUGS FOR MULTICOUPLINGS HOLES

When the multicoupling chosen has one or more holes where are not fitted the couplings or the electrical connectors, it is important to cover the holes with the proper plugs in order to avoid that the dirt enters inside of the multicoupling.
The plugs for multicouplings holes are constructed in black anodizing aluminum.

PLUG FOR FIXED MULTICOUPLING
Tappo per multinnesto fisso

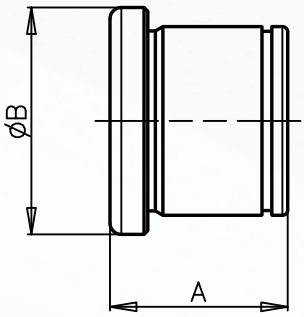

PLUG FOR MOBILE MULTICOUPLING
Tappo per multinnesto mobile

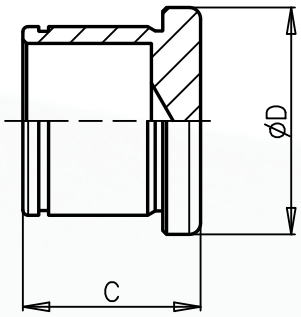

Description	Unit	A	B	C	D	Unit	Weight	
							Fixed half	Mobile half
PLUG FOR FIXED AND MOBILE MULTICOUPLING HOLE SIZE 1/4	mm Inch	23,5 0,93	26,0 1,02	23,5 0,93	26,0 1,02	Kg lb	0,025 0,05	0,017 0,04
PLUG FOR FIXED AND MOBILE MULTICOUPLING HOLE SIZE 3/8	mm Inch	23,5 0,93	30,0 1,18	23,5 0,93	30,0 1,18	Kg lb	0,035 0,08	0,019 0,04
PLUG FOR FIXED AND MOBILE MULTICOUPLING HOLE SIZE 1/2	mm Inch	23,8 0,94	36,0 1,42	23,8 0,94	36,0 1,42	Kg lb	0,056 0,12	0,028 0,06
PLUG FOR FIXED AND MOBILE MULTICOUPLING HOLE SIZE 5/8	mm Inch	23,8 0,94	38,0 1,50	23,8 0,94	38,0 1,50	Kg lb	0,063 0,14	0,030 0,07
PLUG FOR FIXED AND MOBILE MULTICOUPLING HOLE SIZE 3/4	mm Inch	24,5 0,96	45,0 1,77	31,5 1,24	45,0 1,77	Kg lb	0,090 0,19	0,065 0,14
PLUG FOR FIXED AND MOBILE MULTICOUPLING HOLE SIZE 1	mm Inch	24,8 0,98	57,0 2,24	32,8 1,29	57,0 2,24	Kg lb	0,14 0,38	0,085 0,19

TECHNICAL FEATURES AND TERMS GLOSSARY

Interchangeability
Possibility of male coupling half or female coupling half to connect with the other brands of couplings.
Valve system
Type of valve used to shut-off medium flow from the male and female coupling half when disconnected.
Mechanical connection
Method or type of connection that creates retention between the male coupling half with female coupling half.
Size
Nominal size of coupling body.
ISO Size
Size indicated by ISO standard (the International Organization for Standardization) related to interchangeability of the couplings.
Rated flow
Typical rated flow relative to the size, in according with ISO 7241-2 standard.
Max. flow suggested
Max. flow suggested by Stucchi S.p.A.
Connect force
Value of force required to connect the couplings without residual pressure in the system.
Disconnect force
Value of force required to disconnect the couplings without residual pressure in the system.
Connect torque
Value of torque required to connect the couplings without residual pressure in the system.
Disconnect torque
Value of torque required to disconnect the couplings without residual pressure in the system.
Spillage
Indicative value of the fluid loss per couple - uncouple cycle without residual pressure. Checked on sample in according with ISO 7241-2 test method.
Max. operating pressure
The maximum peak of pressure which can be used the product.
Burst pressure
Value of pressure at which a coupling looses its ability to retain pressure.
Max. residual pressure during connection
Max. residual pressure trapped in the circuit where the coupler is allowed to connect.
Max. residual pressure during disconnection
Max. residual pressure trapped in the circuit where the coupler is allowed to disconnect.
Tightening torque
For screw couplings it is the torque value to which the male coupling half is to be connected with the female coupling half.
Coupled
Male coupling half connected with the female coupling half.
Male
Male coupling half uncoupled.
Female
Female coupling half uncoupled.
Temperature range
Temperature range which can be used the product.
Pressure drop
Pressure lost between the inlet and outlet of the coupling.
Brinelling
Markings of the locking balls on the metallic parts where they are in contact.

SEALS AND RELATIVE TEMPERATURE RANGE

Seal compound	Temperature range Celsius degrees °C	Temperature range Fahrenheit degrees °F
NBR (Nitrile)	-20 +100	-4 +212
VITON	-15 +180	+5 +356
EPDM (Ethylene Propylene)	-40 +150	-40 +302
KALREZ	-25 +300	-13 +572
HNBR	-30 +130	-22 +266
FLUOROSILICONE	-50 +150	-58 +302
SILICONE	-50 +150	-58 +302
NEOPRENE	-40 +100	-40 +212
PTFE (Teflon)	-50 +180	-58 +356

The above temperatures are indicative and can change due to the fluid used.
For the correct choice of the seal, we suggest you to consult the Stucchi customer service.

CONVERSION FACTORS FROM INTERNATIONAL SYSTEM (SI) TO ANGLO SAXON SYSTEM (USA)

Characteristics	International system SI	Anglo Saxon system USA	Trasformation from SI to USA	Trasformation from USA to SI
PRESSURE	Mega Pascal (MPa) 1 MPa = 10 bar	Pound/Square Inch (psi)	1 Mpa = 145psi	1 psi = 0,0069 Mpa
FLOW IN HYDRAULIC	Liter per minute (l/min)	Gallon per minute (GPM)	1 l/min = 0,265 GPM	1 GPM = 3,78 l/min
FORCE	Newton (N)	Pound force (lbf)	1 N = 0,225 lbf	1 lbf = 4,444 N
TORQUE	Newton meter (Nm)	Pound force x Foot (lbf ft)	1 Nm = 0,737 lbf ft	1 lbf ft = 1,357 Nm
TEMPERATURE	Celsius degree (°C)	Fahrenheit degree (°F)	°C = (°F-32)/1,8	°F = (°Cx1,8)+32
LENGTH	Millimeter (mm) Meter (m)	Inch (Inch) Foot (ft)	1mm = 0,03937 Inch 1 m = 3,28084 ft	1 Inch = 25,4 mm 1 ft = 0,3048 m
WEIGHT	Kilogram (kg)	Pound (lb)	1 Kg = 2,2046 lb	1 lb = 0,4536 Kg

NOTES

Stucchi®

Stucchi S.p.A.
Via delle Arti e dei Mestieri, snc 24040 Pagazzano (BG) - Italy
Tel. +39 0363 380106 - Fax +39 0363 380171 - www.stucchi.it

Stucchi USA inc.
1107 Windham Parkway, Romeoville, IL 60446 - USA
Phone +1/847 9569720 - Fax +1/847 9569723

CAT. MULTICOUPLINGS - March 2008